配布許可印
ニコンカメラサービス部 GM

# Nikon 35Ti FCA 22001

QUARTZ DATE

## REPAIR MANUAL

## 修　理　指　針

Nikon | NIKON CORPORATION
Tokyo, Japan

© Copyright 1993
ALL RIGHTS RESERVED
無断転載を禁ず!!

Printed in Japan October 1993

# Specifications

1. OUTLINE ---------- M 1

2. REQUIRED TIME FOR FILM ADVANCE/REWIND OPERATION ---------- M 1

3. WARNING MESSAGE DISPLAY ---------- M 2

4. OPERATION IN SB MODES ---------- M 2

5. ACTUAL DISTANCE RANGE OF DISTANCE INDICATORS ---------- M 3

6. DATA IMPRINTING SEQUENCE ---------- M 3

AE program chart ---------- M 4

AE range chart ---------- M 5

7. PROCEDURES FOR MANUAL TEST ---------- M 6

# SPECIFICATIONS

## 1. OUTLINE

(1)Shopoting disatnce range : 0.4m to infinity
(2)Light Measuring Sensor : SPD with a 6-area metering system
(3)Exposure control range : EV2 to 17 at ISO 100
(4)EV level for auto flash operation : EV9 or lower (at ISO≤200)
(5)Guide Number of flash : 9(ISO 100, in meter)
(6)AF control pulse : 833 pulses
(7)Base length : 30mm
(8)Metering range : BV -3 TO 12
(9)Time exposure limit : Max. 10 min.
(10)Illuminators for viewfinder and analogue display
① In Auto mode : Only the LED illuminator for the viewfinder information lights up automatically when ambiant light reaches BV 2.0 or lower.
② In Manual mode : By switching on the S3 button (Self-timer/illuminator button), two illuminators light up according to ambient light conditions as in the following table.

| | Viewfinder | Analog Displa |
|---|---|---|
| 2<BV | Lights up with high output | Does not light up |
| 0<BV≤2 | Lights up with low output | Does not light up |
| BV≤0 | Lights up with low output | Lights up |

## 2. REQUIRED TIME FOR FILM ADVANCE/REWIND OPERATION

| OPERATION | TIME |
|---|---|
| Malfunction of auto film loading | Malfunction of film loading occurs when PI pulse (FPS) is not generated in 5sec. |
| Film winding | 180 edges per frame |
| SAuto film rewindig | The automatic film rewinding starts when:<br>① Winding by one edge is not completed within 2 seconds, or<br>② The camera winds for 0.5 sec. after the 37th frame has been taken. |
| Auto film rewind stops | By a rewinding timer:<br>At MANUAL rewind ---- 8 sec./edge<br>At MANUAL rewind ---- 8 sec./edge |
| Manual rewinding | By turning on the manual rewinding switch |
| Fork becomes free after the completion of film rewind | Film rewind motor turns normally for 0.5 sec. after the completion of film rewind operation. |

3. WARNING MESSAGE DISPLAY

| ITEMS | MESSAGE |
|---|---|
| No film loaded | "E" mark turns on after blinking 6 sec. (2Hz) |
| Auto loading error | "E" mark turns on after blinking 6 sec. (2Hz) |
| Lens barrel stops abnormally | If no pulse is generated for 1 sec. during lens barrel movement, all viewfinder and data back LCD blink. (2Hz) |
| Out of mimimum focusing distance | The AF mark in the viewfinder LCD blinks. (2Hz)<br>The analogue pointer stops in the red area. |
| Weak battery power | The warning mark blinks (2Hz) |
| Out of AE metering range | For over-exposure, "H" in viewfinder LCD blinks. (2Hz)<br>For under-exposure, "L" blinks. (2Hz) |
| Flash not fully chatged | While keeping the release button pressed halfway, the arrow mark blinks. (4Hz) |

4. OPERATION IN SB MODES

| MODE | FUNCTION | CANCEL TIME |
|---|---|---|
| Auto Flash (AUTO) | Flash mode is automatically selected when LV is lower than 10. | 1/30 sec. |
| Flash cancellation | No flash fires regardless of subject brightness. | 2 sec. |
| Anytime flash (including Slow Sync Flash) | Flash always fires regardless of subject brightness. Controlling -1 EV in daylight sync mode. | 1/30 sec.<br>1/4 sec. |
| Red eye reduction | Red eye reduction lamp lights up when BV is lower than 4.5. | |

** Recharging stops when a predetermined voltage cannot be obtained within 20 sec. (NL1 -> on)

5. ACTUAL DISTANCE RANGE OF DISTANCE INDICATORS

| Analogue Indicator | M/F distance | Distance Range | Analogue Indicator | M/F distance | Distance Range |
|---|---|---|---|---|---|
| Triangle | 45 (m) | Infinity | · | 1.5 | 1.35～1.7 |
| · | 11 | 8～ | 1 | 1 | 0.95～1.35 |
| 5 | 5 | 4.6 ～ 8.0 | · | 0.85 | 0.77～0.95 |
| · | 4 | 3.3 ～ 4.6 | 0.7 | 0.7 | 0.63～0.77 |
| 3 | 3 | 2.8 ～ 3.3 | · | 0.55 | 0.5～0.63 |
| · | 2.5 | 2.2 ～ 2.8 | 0.4 | 0.4 | 0.39～0.5 |
| 2 | 2 | 1.7 ～ 2.2 | □ | 0.4 | 0.35～0.39 |

6. DATA IMPRINTING SEQUENCE

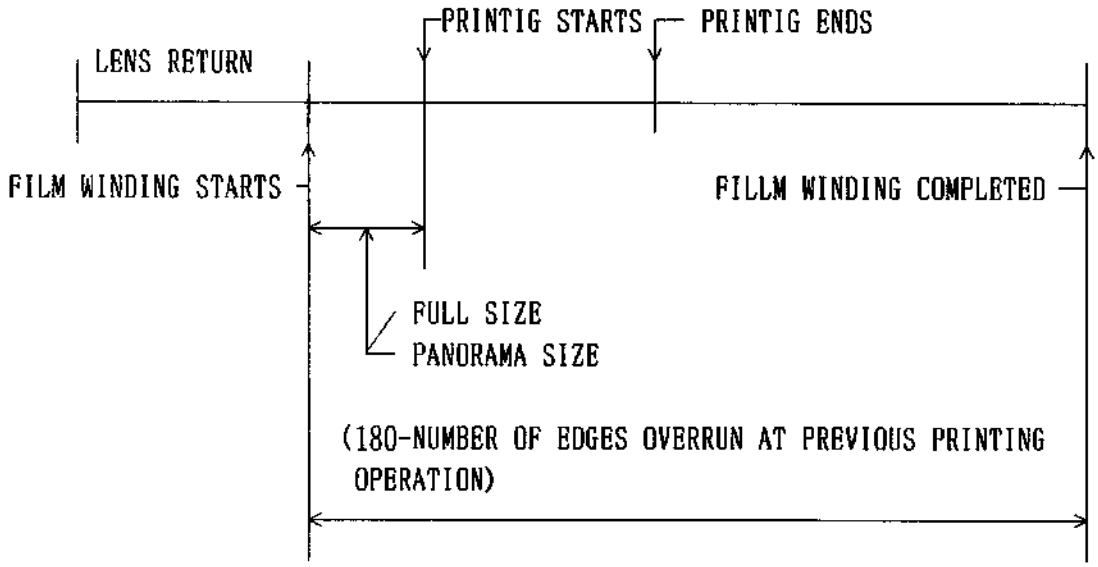


PRINTING TIME

| ISO | TIME | ISO | TIME |
|---|---|---|---|
| 25≦ISO ≦50 | 160μS | 250 ≦ISO ≦320 | 80μS |
| 64≦ISO ≦100 | 160μS | 400 ≦ISO ≦800 | 40μS |
| 125 ≦ISO ≦200 | 80μS | 1000≦ISO | 20μS |

AE program chart

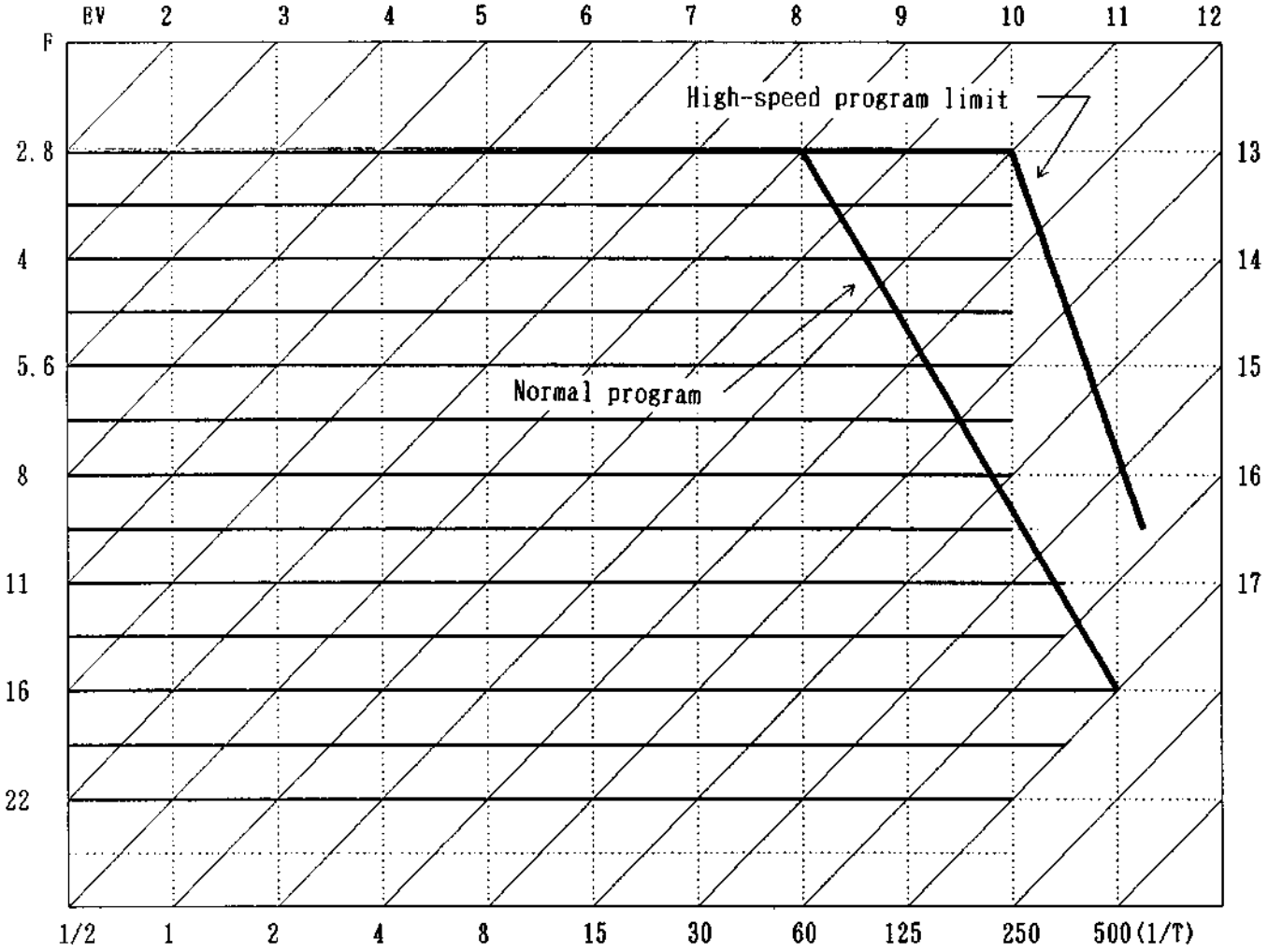

# AE range chart

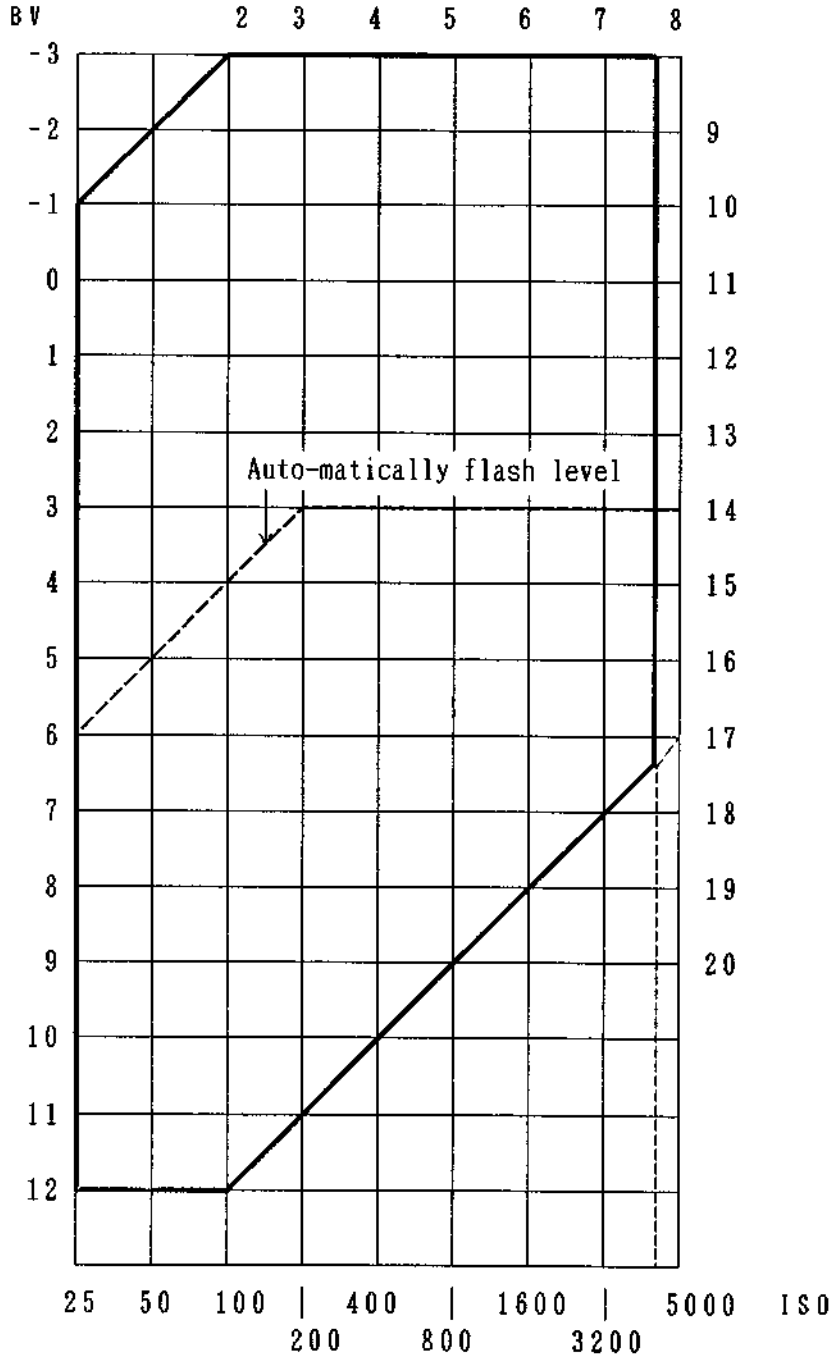

7. PPROCEDURES FOR mNUAL TESR

(1) SELECTOR MODE

[ 0 0 ** ] Film counter number is displayed in **.
[ 1 0 ** ] Film speed as in the following table (Data value) is displayed in **.
[ 2 * ** ] BV is displayed in ***. (BV = Displayed data/12)
[ 3 ** ** ] Metered distance data by AF IC is displayed in ****.

(Data in the table below are only for reference purposes.)

| ISO | Disply data | ISO | Disply data |
|---|---|---|---|
| Non DX | 0 | 400 | 18 |
| 25 | 6 | 500 | 19 |
| 32 | 7 | 640 | 20 |
| 40 | 8 | 800 | 21 |
| 50 | 9 | 1000 | 22 |
| 64 | 10 | 1250 | 23 |
| 80 | 11 | 1600 | 24 |
| 100 | 12 | 2000 | 25 |
| 125 | 13 | 2500 | 26 |
| 160 | 14 | 3200 | 27 |
| 200 | 15 | 4000 | 28 |
| 250 | 16 | 5000 | 29 |
| 320 | 17 | | |

| 測距値 (m) | Disply data (pluse) |
|---|---|
| 0. 4 | 749 |
| 1. 0 | 401 |
| 1. 5 | 327 |
| 2. 0 | 291 |
| 2. 5 | 269 |
| 3. 0 | 255 |
| 3. 5 | 245 |
| 4. 0 | 237 |
| 4. 5 | 231 |
| 5. 0 | 227 |
| ∞ (45.0) | 189 |

(2) HOW TO ENTER THE MANUAL MODE

Confirm that Power is off
↓
Turn the selector dial to "P" position, while keeping the SET button pressed.
↓
Confirm that the display shows (00 0 00) with the two on left side blinking.
↓
Keep pressing AF button without operating any other switches.
↓
Confirm that the display shows (00 0 00) with no segments blinking.
↓
Move the lens barrel by pressing several times MODE or SET button, and confirm the dispaly (00 0 00).
↓
select a number of desired mode by pressing SET button.
↓
The data will be displayed by pressing the release button halfway.

NOTE:
The selector mode number (00 0 00) can be pbtained generally only after the lens barrel movement operation is done. However, it is also possible to have this (00 0 00) mode by pressing the release button halfway when you reach (3 0 00) in the loop of modes. Please refer to the diagram below.

Confirm that the display shows after
the lens barrel movement operation [ 0 0 0 0]

SET button ON ① [ 1 0 0 0]
↓
SET button ON ② [ 2 0 0 0]
↓
SET button ON ③ [ 3 0 0 0]
↓
SET button ON ④ [ 3 0 0 0]

(3) HOW TO CANCEL MANUAL TEST MODE

To cancel manual test mode, turn the selector dial to "OFF" position.

# DISASSEMBLING

1. Disassembling to rear body and lens barrel unit

Bottom cover ---------- D 1
Leatherette ---------- D 1
Top cover ---------- D 2
Mode set unit, camera back ---------- D 2
Side cover, discharging of the main condenser ---------- D 3
Front cover ---------- D 3
Viewfinder group, LCD unit ---------- D 4
Main FPC ---------- D 5
Camera back lock releases ---------- D 6
Flash base plate unit ---------- D 7
Removing lens barrel unit ---------- D 7

2. Rear body

W／R motor group, W／R gear group ---------- D 8
Panorama lever group ---------- D 9
Date module unit, panorama unit ---------- D 9

3. Lens helicoid

AF unit ---------- D 1 0
Lens cover unit, joint gear group ---------- D 1 0
Helicoid gear unit ---------- D 1 1
Lens barrel group ---------- D 1 1
Name ring ---------- D 1 2
Shutter unit, front lens, rear lens, helicoid ---------- D 1 2

# DISASSEMBLING

**Note :** ① Remove batterise before disassembling.

② When disassembling, pay attention to the wire arrangement and mounting positions and types of screws to be removed.

③ Be sure you are grounded when holding main FPC because static electricity exerts serious adverse effects on ICs.

④ The tone of pictures may be different from actual one. Make sure of the shape of parts when disassembling and reassembling.

⑤ When removing gears, make sure to distinguish the front and back sides.

## 1 . DISASSEMBLING TO REAR BODY AND LENS BARREL UNIT

BOTTOM COVER

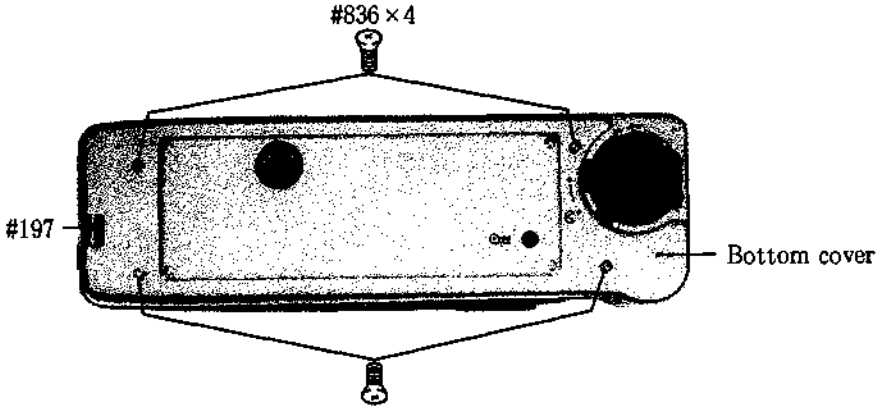


LEATHERETTE

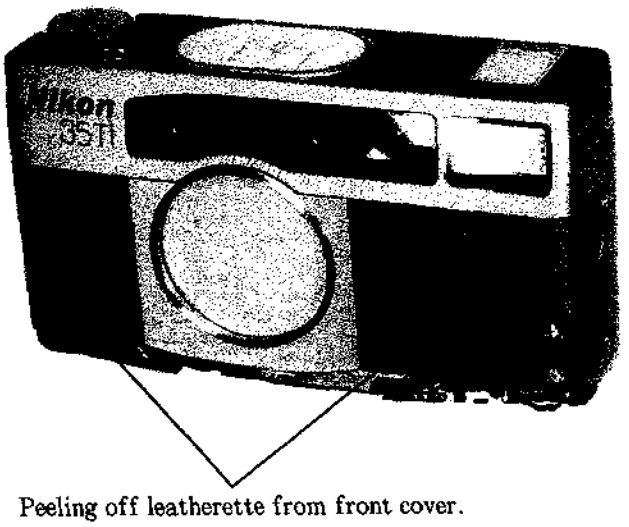


Peeling off leatherette from front cover.

TOP COVER

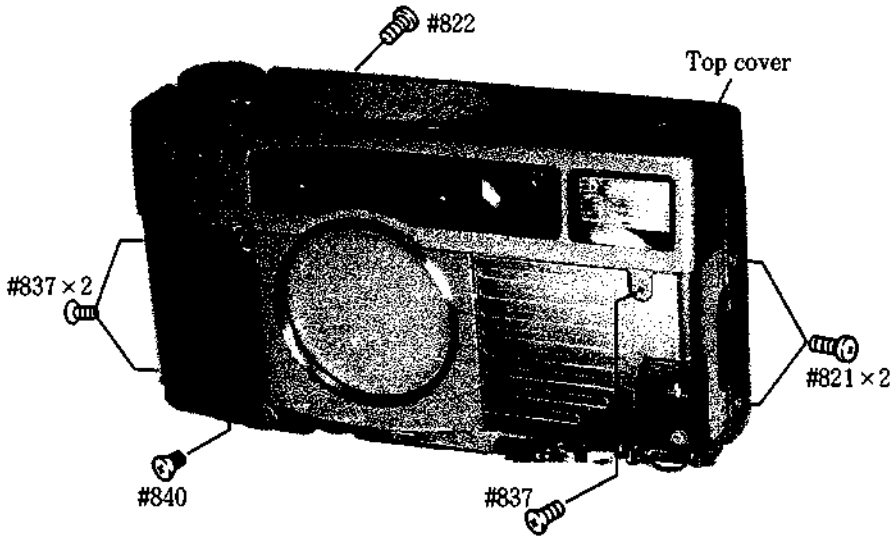


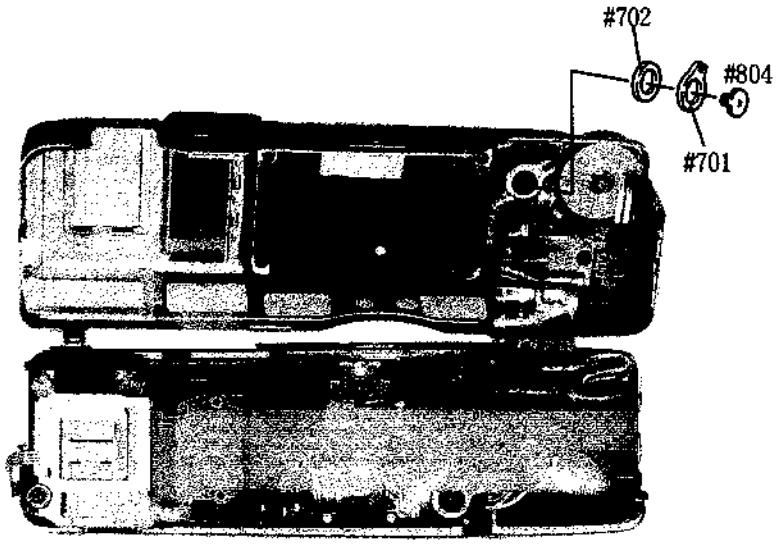


MODE SET UNIT, CAMERA BACK

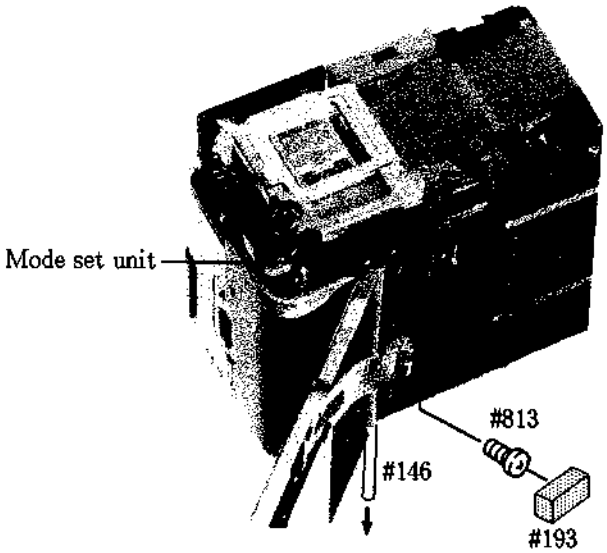

## SIDE COVER, DISCHARGING OF THE MAIN CONDENSER

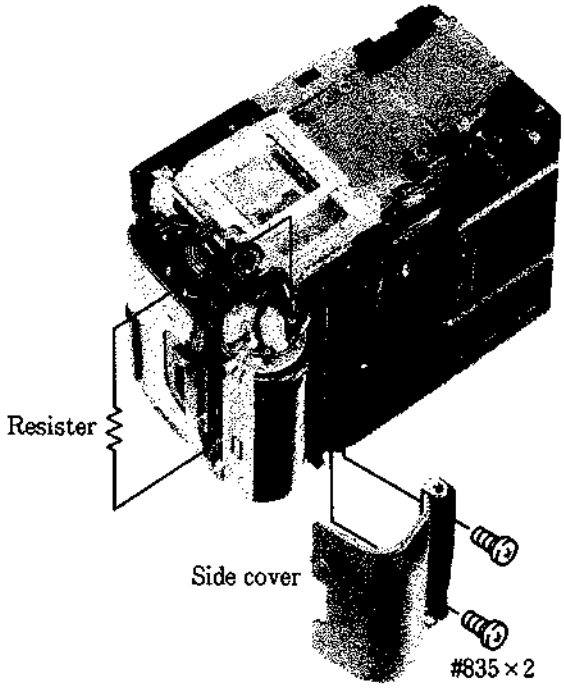


- Discharge the main condenser it the both sides.
- Use 2KΩ／5Wresister to discharged.

## FRONT COVER

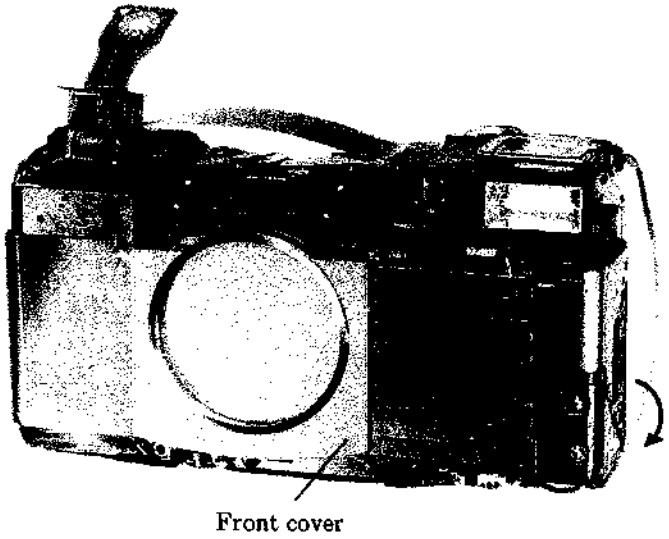

VIEWFINDER GROUP, LCD UNIT

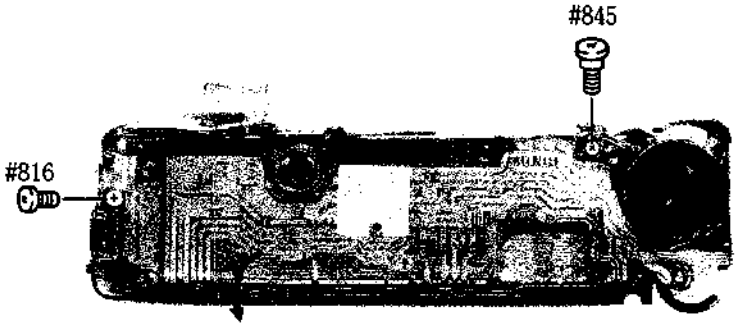


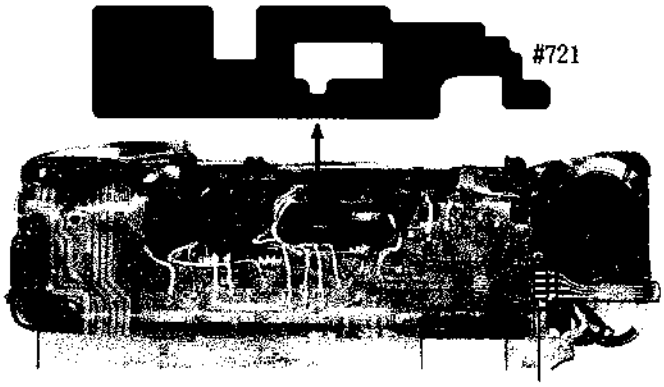


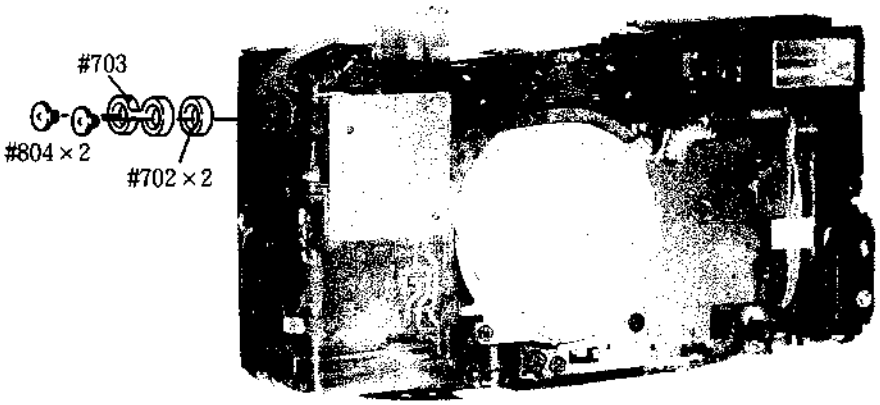


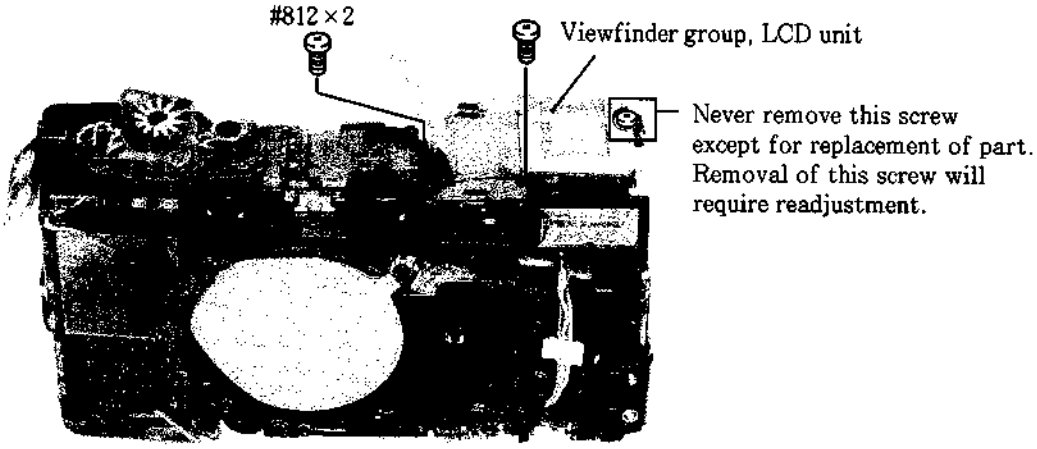

MAIN FPC

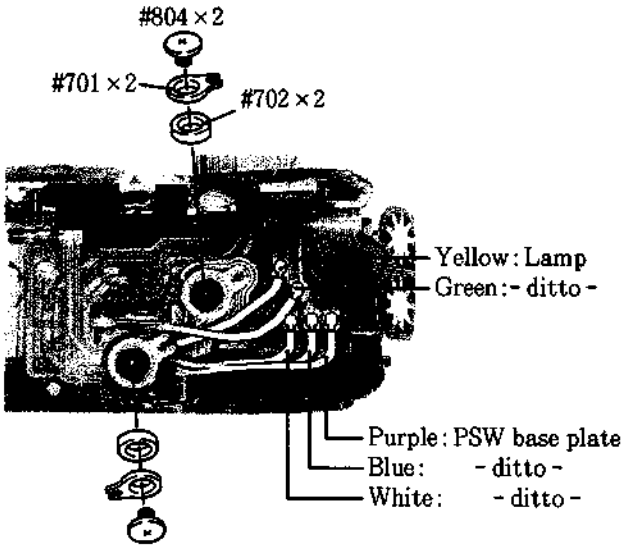
#804 × 2
#701 × 2
#702 × 2
Yellow : Lamp
Green : - ditto -
Purple : PSW base plate
Blue : - ditto -
White : - ditto -

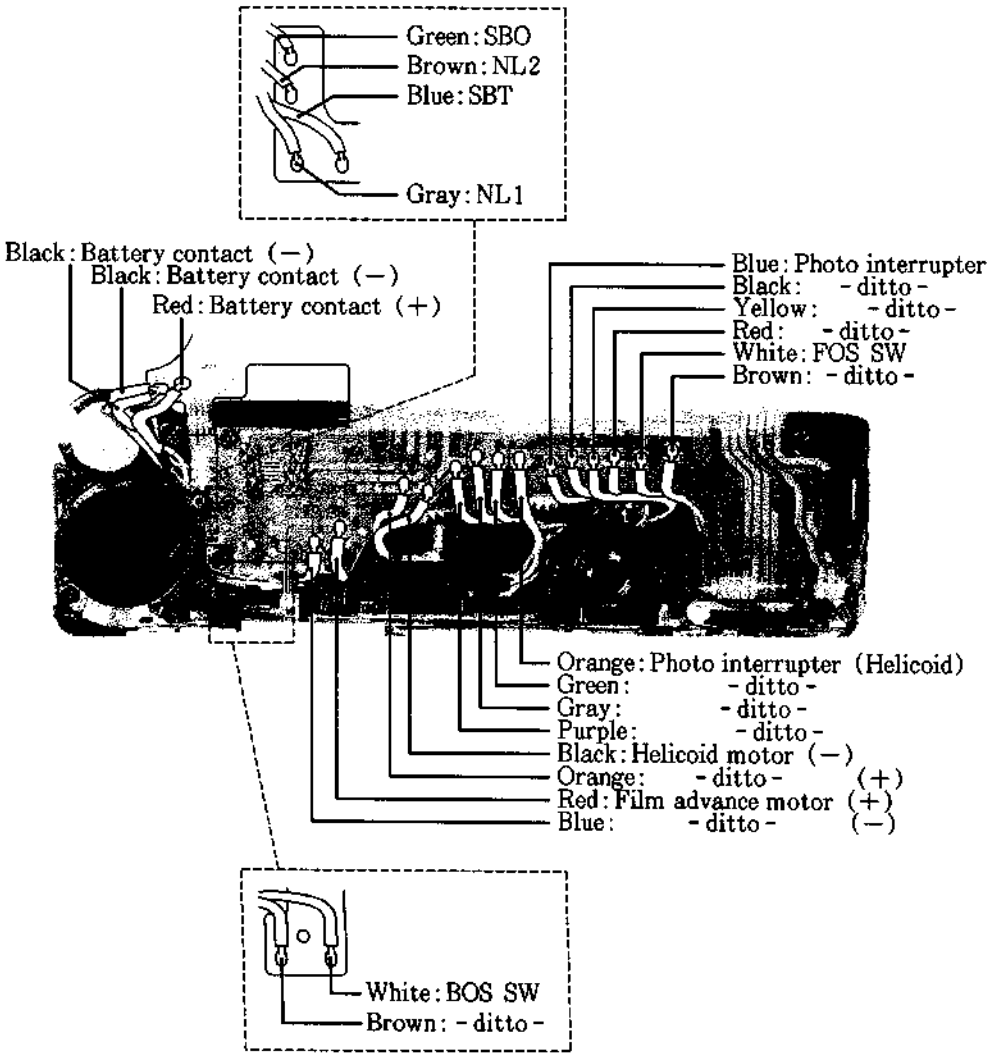
Green : SBO
Brown : NL2
Blue : SBT
Gray : NL1
Black : Battery contact (－)
Black : Battery contact (－)
Red : Battery contact (＋)
Blue : Photo interrupter
Black : - ditto -
Yellow : - ditto -
Red : - ditto -
White : FOS SW
Brown : - ditto -
Orange : Photo interrupter (Helicoid)
Green : - ditto -
Gray : - ditto -
Purple : - ditto -
Black : Helicoid motor (－)
Orange : - ditto - (＋)
Red : Film advance motor (＋)
Blue : - ditto - (－)
White : BOS SW
Brown : - ditto -

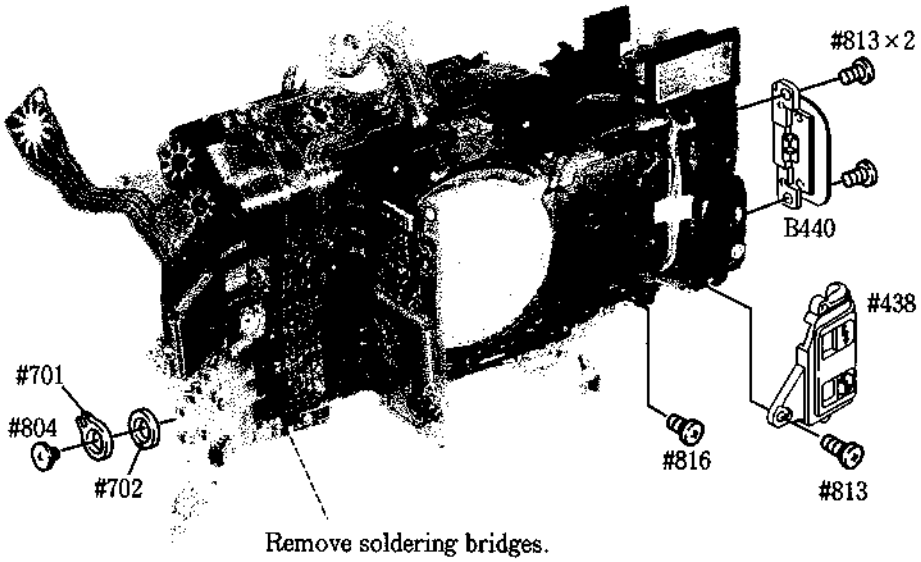


CAMERA BACK LOCK RELEASES

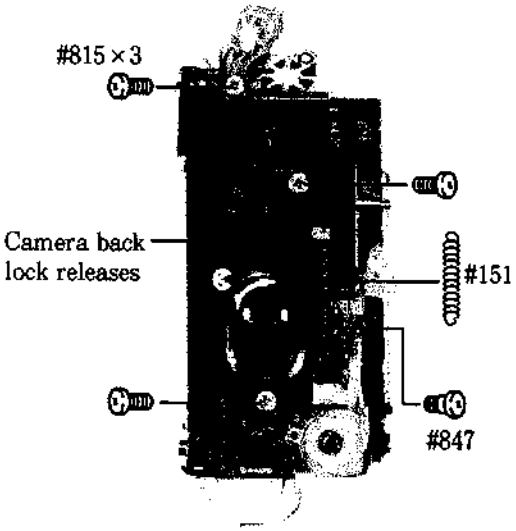

FLASH BASE PLATE UNIT

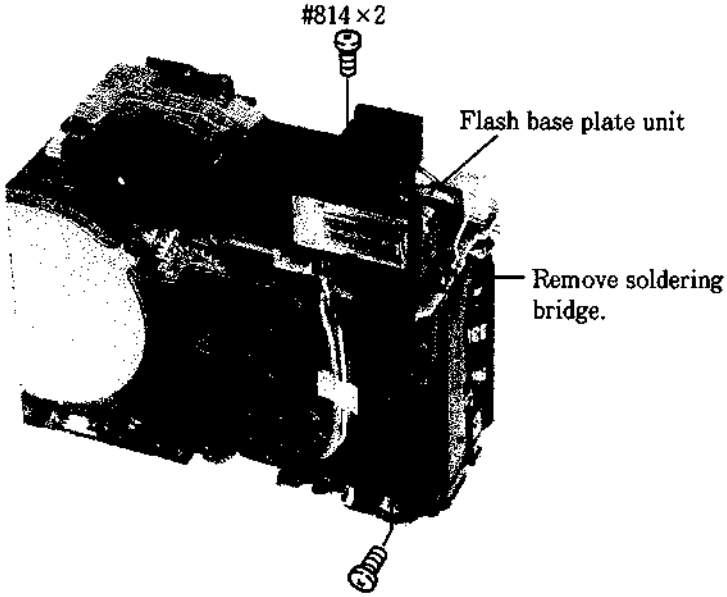


REMOVING LENS BARREL UNIT

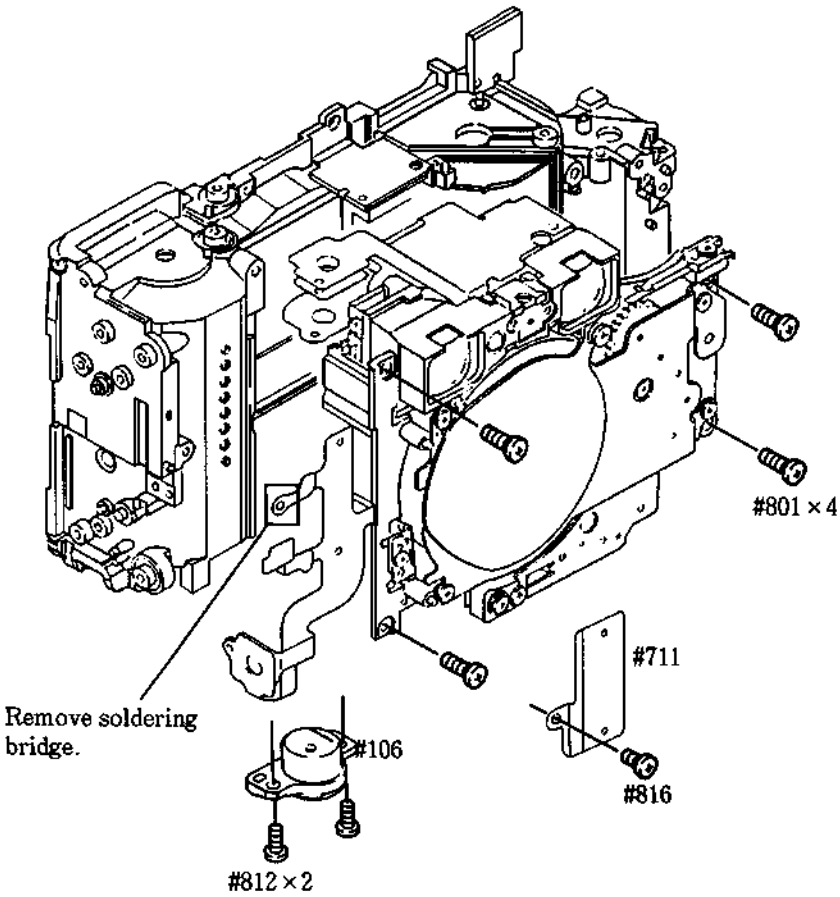

# 2. REAR BODY

W／R MOTOR GROUP, W／R GEAR GROUP

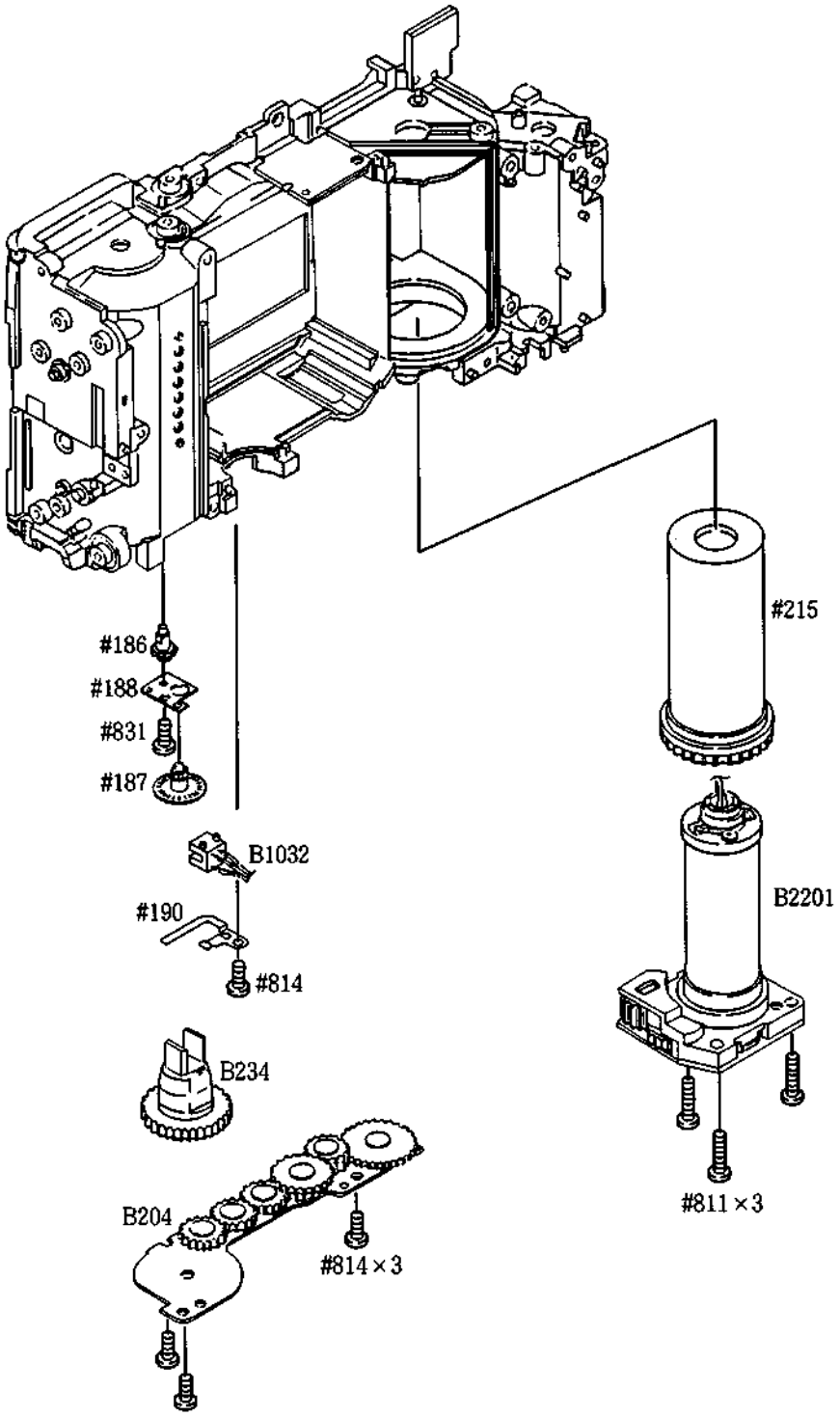

PANORAMA LEVER GROUP

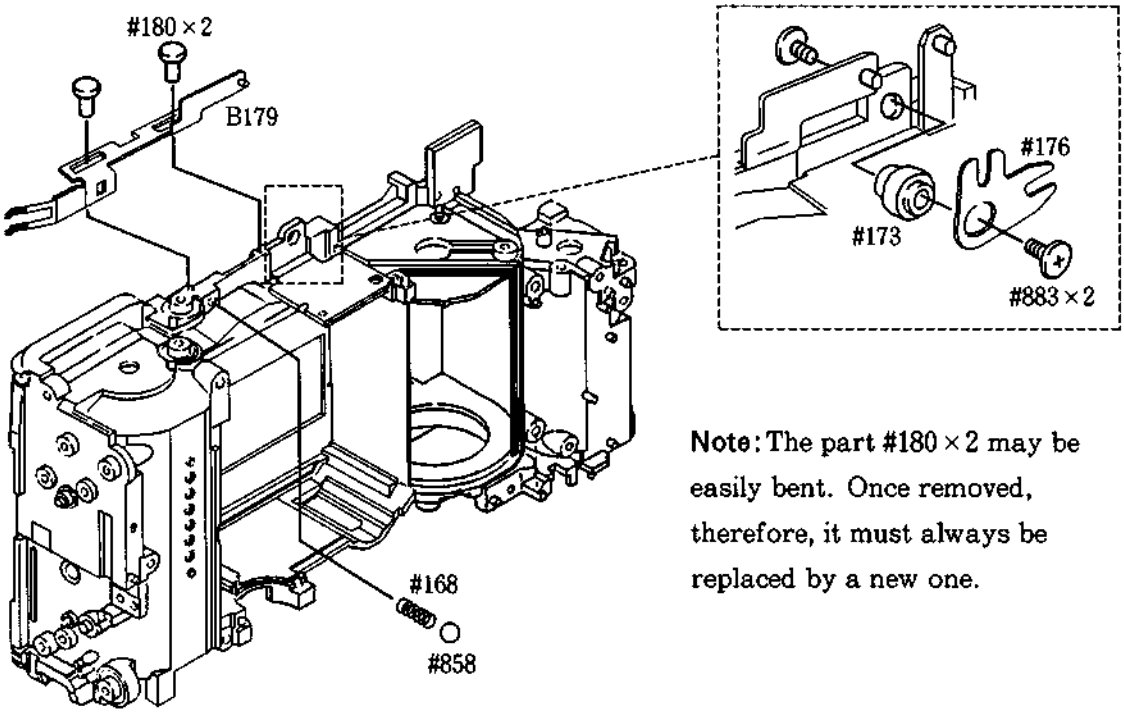


**Note**: The part #180 × 2 may be easily bent. Once removed, therefore, it must always be replaced by a new one.

DATE MODULE UNIT, PANORAMA UNIT

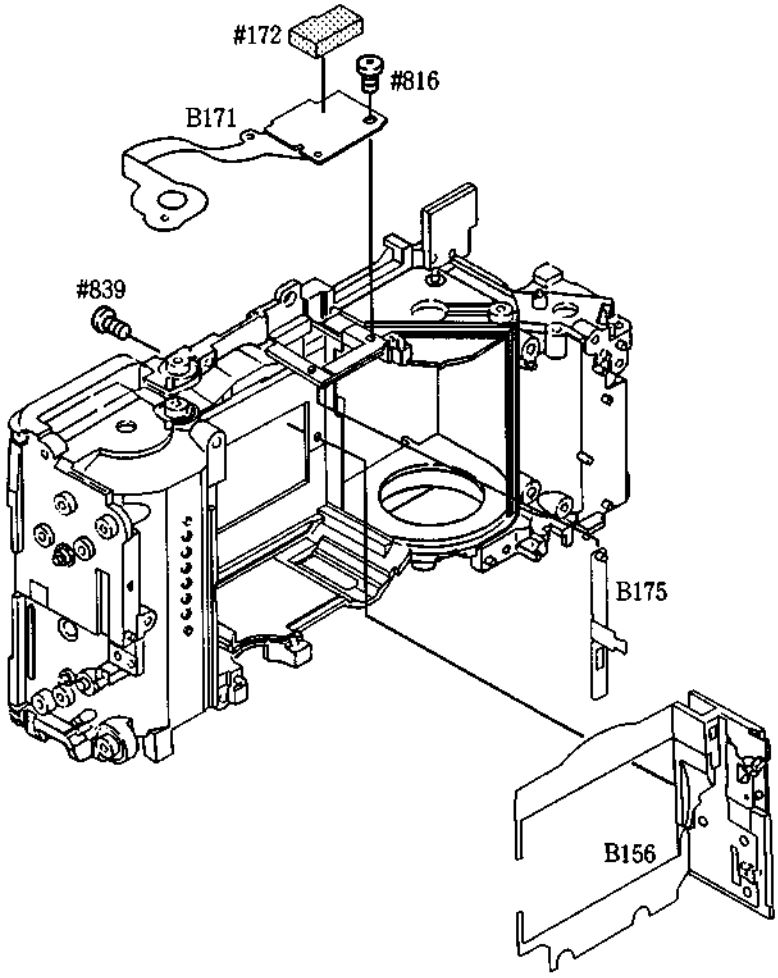

# 3. LENS HELICOID

AF UNIT

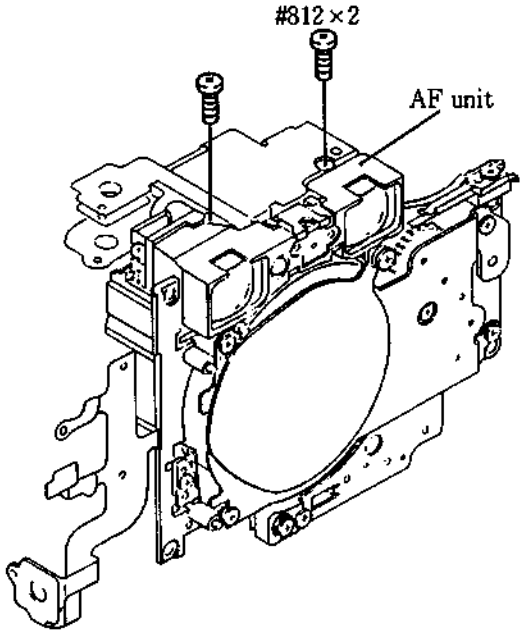


LENS COVER UNIT, JOINT GEAR GROUP

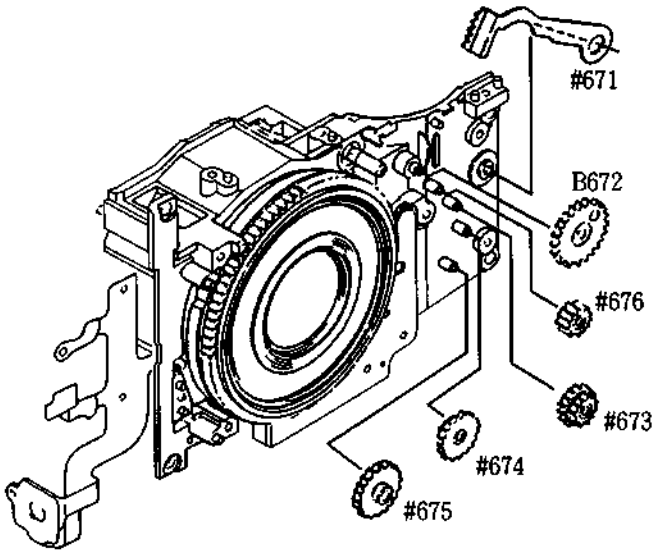


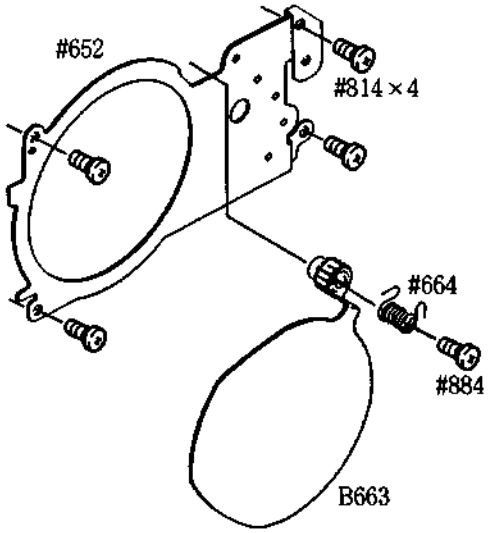

HELICOID GEAR UNIT

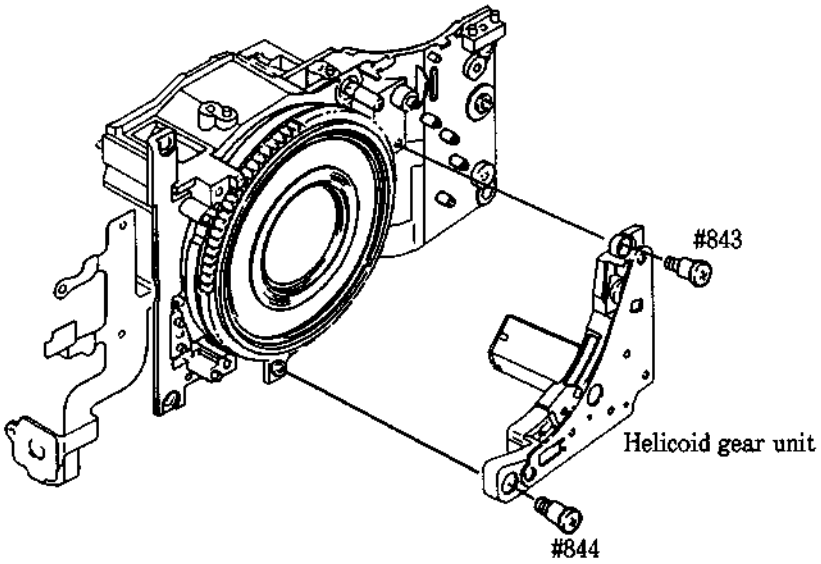


LENS BARREL GROUP

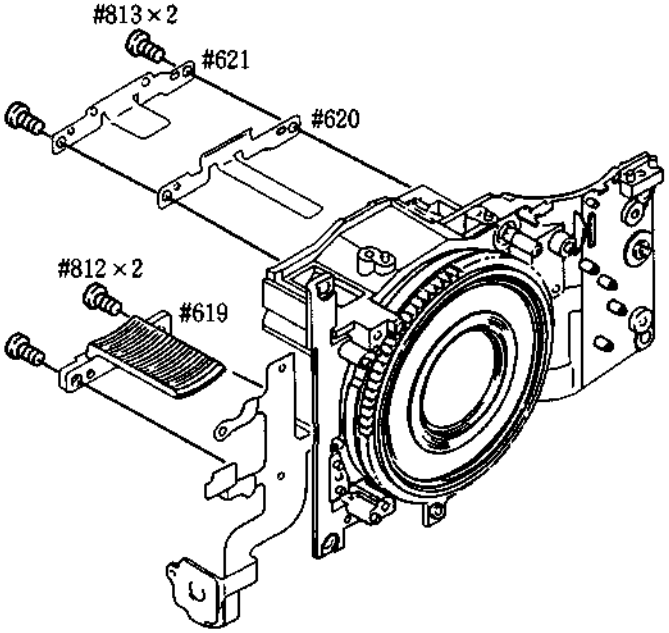

NAME RING

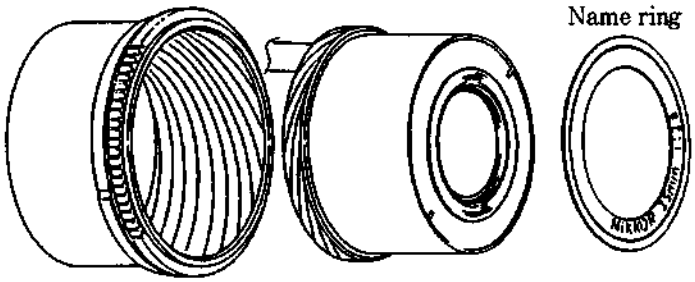


SHUTTER UNIT, FRONT LENS, REAR LENS, HELICOID

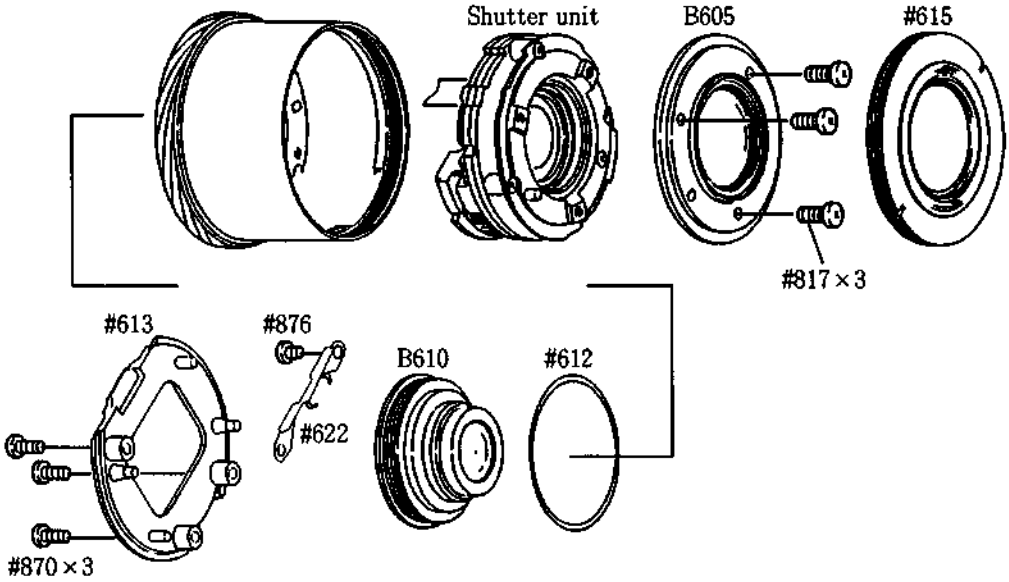

# ASSEMBLING／ADJUSTMENT


Shutter unit, front lens group ---------- A 1
Rear lens group ---------- A 1
Helicoid ---------- A 2
Lens barrel group ---------- A 2
Inspection of helicoid position ---------- A 3
Joint gear group ---------- A 3
Lens cover group ---------- A 4
Inspecting lens cover operation ---------- A 4
Date module unit, panorama unit ---------- A 5
Panorama lever group ---------- A 5
W／R motor group, W／R gear group ---------- A 6
Aligning of rear body and lens barrel unit ---------- A 7
AF unit, flash base plate unit ---------- A 7
Camera back lock releases ---------- A 8
Main FPC ---------- A 8
Viewfinder group, LCD unit ---------- A 1 1
Front cover ---------- A 1 2
Side cover ---------- A 1 2
Mode set unit, camera back ---------- A 1 3
Bottom cover ---------- A 1 3
Press-contact between the top cover and the main FPC ---------- A 1 3
Inspecting camera operation ---------- A 1 4
Adjustment of parallax ---------- A 1 6
Adjustment of back focus ---------- A 1 7
Adjustment of AE accuracy, adjustment of AF accuracy ---------- A 1 7
Adjustment of USA version ---------- A 1 8
Top cover ---------- A 1 9
Leatherette ---------- A 1 9

# ASSEMBLING／ADJUSTMENT

## SHUTTER UNIT, FRONT LENS GROUP

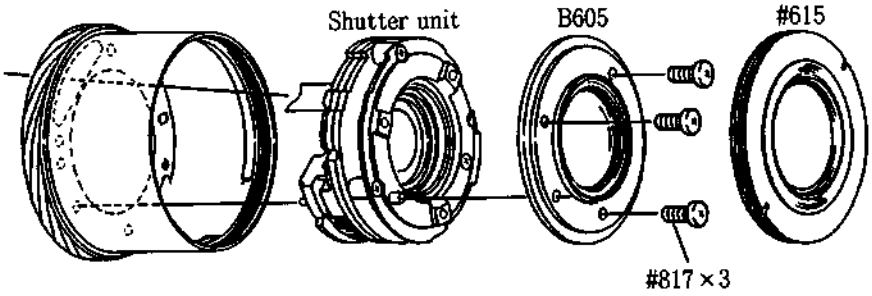


## REAR LENS GROUP

- Secure the shutter FPC at the position shown in the figure on the right.

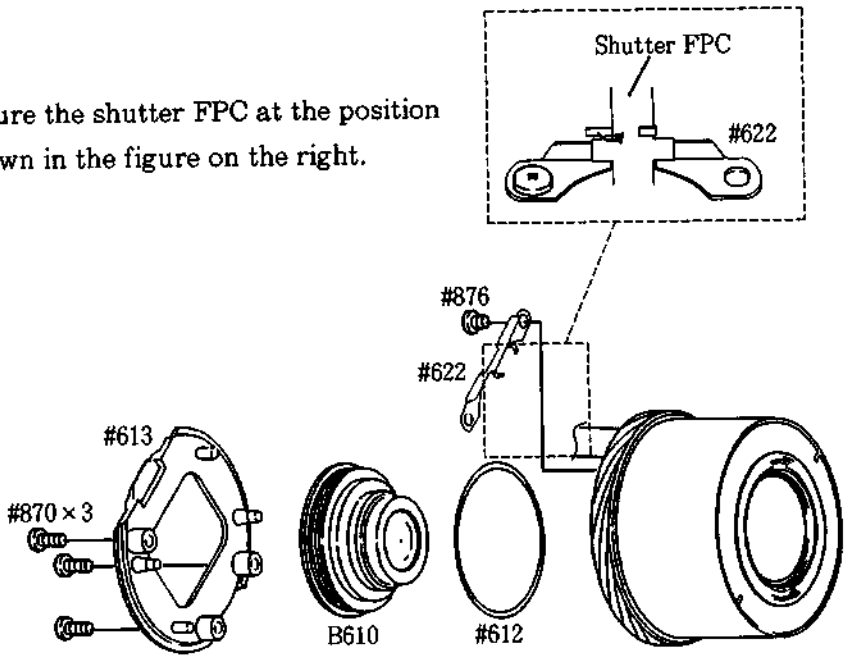


**Note:** When using washer #612 for adjusting space between the front and rear lens groups, set the thickness of the washer to 0.2±0.03mm.

| Parts | Dimensions |
|---|---|
| 612A | t=0.05mm |
| 612B | t=0.06mm |
| 612C | t=0.07mm |
| 612D | t=0.08mm |
| 612E | t=0.09mm |
| 612F | t=0.10mm |

HELICCOID

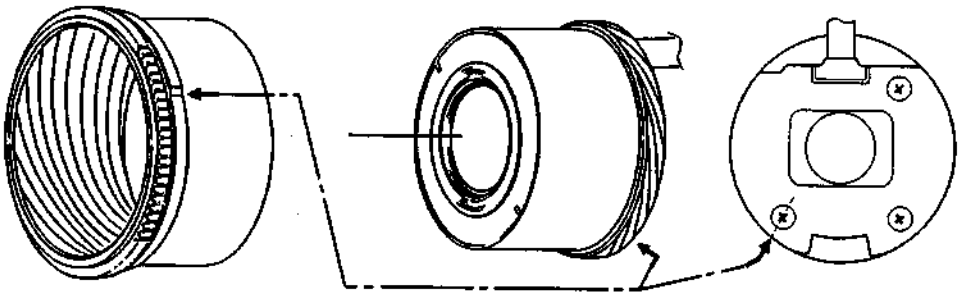

LENS BARREL GROUP

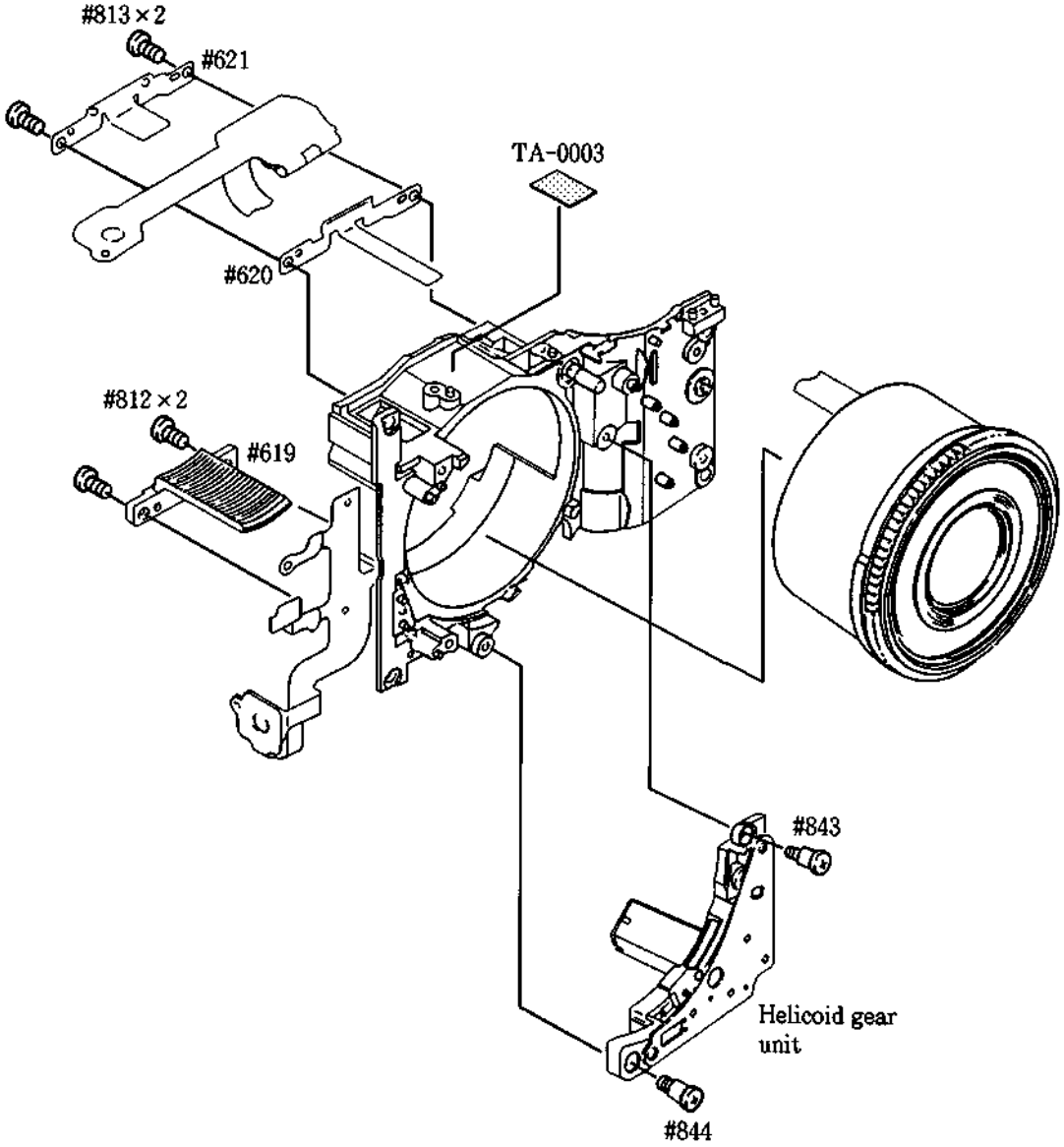

## INSPECTION OF HELICOID POSITION

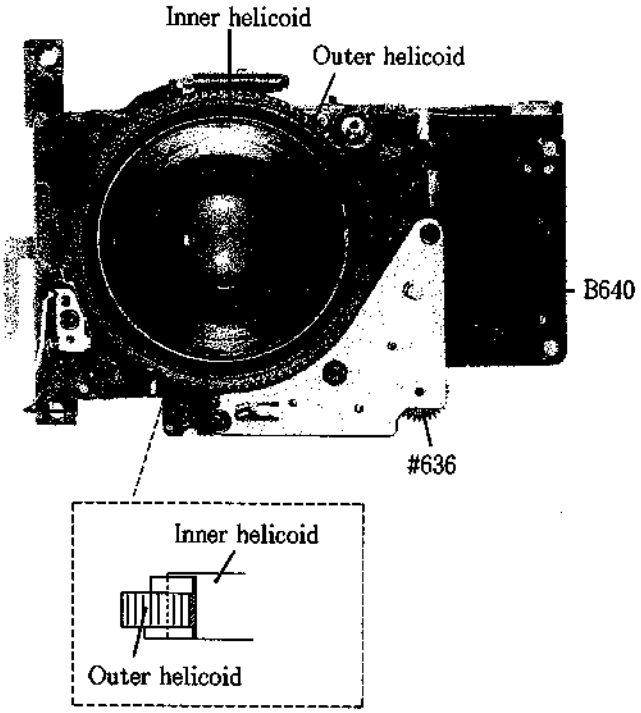


① Turn gear #636 counterclockwise.

② Make sure that B640 comes off from the outer helicoid and gear #636 runs idle when the height of the inner helicoid becomes roughly level with the outer helicoid.

③ Make sure that the inner helicoid moves forward by coupling the B640 with the outer helicoid when gear #636 is turned clockwise.

※ If it does not operate as mentioned above, try mounting the helicoid once again, since the lens has not been mounted at the correct position.

## JOINT GEAR GROUP

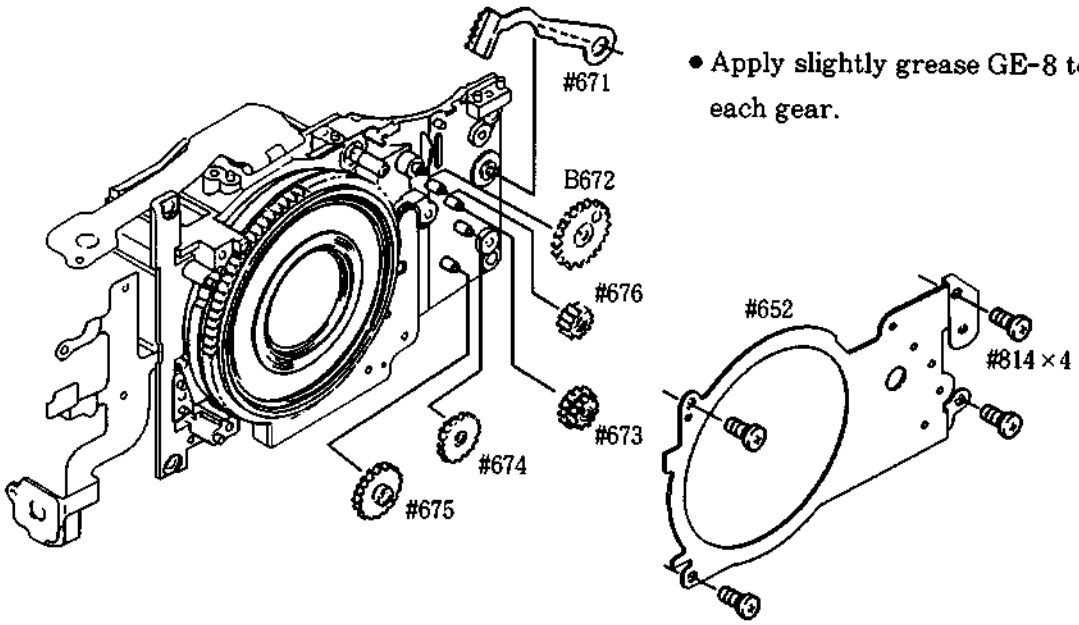


- Apply slightly grease GE-8 to each gear.

**Mounting procedures**

#675 → #673 → #674 → #676 → #671 → B672

## LENS COVER GROUP

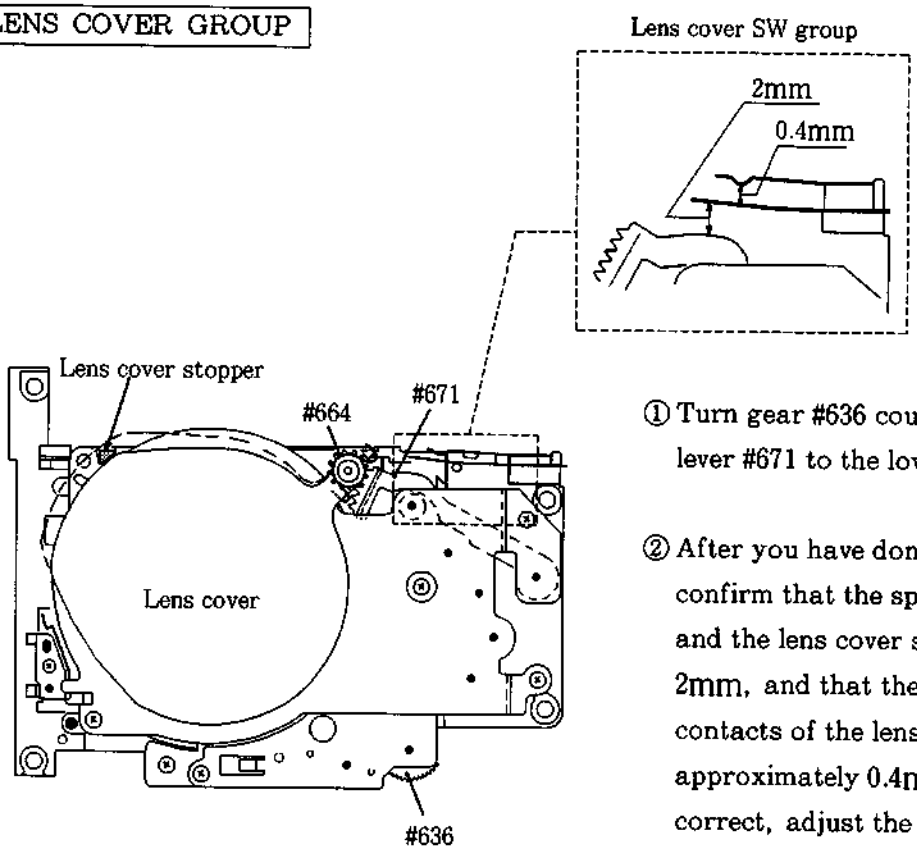


① Turn gear #636 counterclockwise to move lever #671 to the lowest position.

② After you have done this, check to confirm that the space between lever #671 and the lens cover switch is approximately 2mm, and that the space between contacts of the lens cover switch is approximately 0.4mm. If the space is not correct, adjust the mounting position.

③ Mount the lens cover at the position over the lens cover stopper, and hook spring #664.

## INSPECTING LENS COVER OPERATION

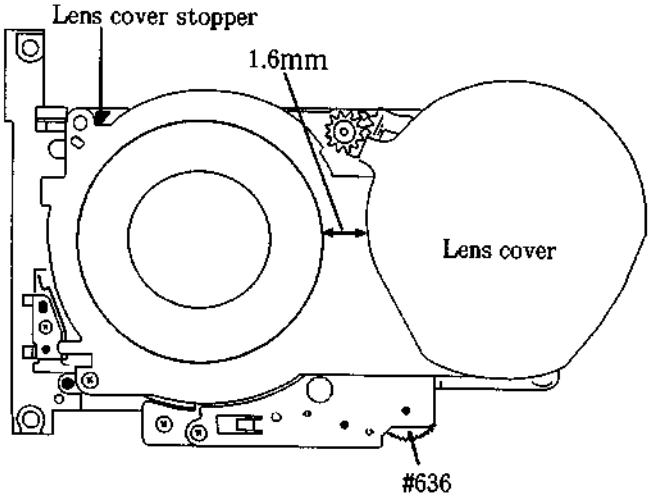


① Make sure that the lens cover opens when gear #636 is turned counter-clockwise, and that the lens cover switch turns ON when it is fully opened. Gear #636 runs idle at the same time.

② Check to see if there is approximately 1.6mm gap between the lens barrel and lens cover.

③ The lens cover closes up to the stopper and the lens cover switch is turned OFF when gear #636 is turned counterclockwise even farther.

DATE MODULE UNIT, PANORAMA UNIT

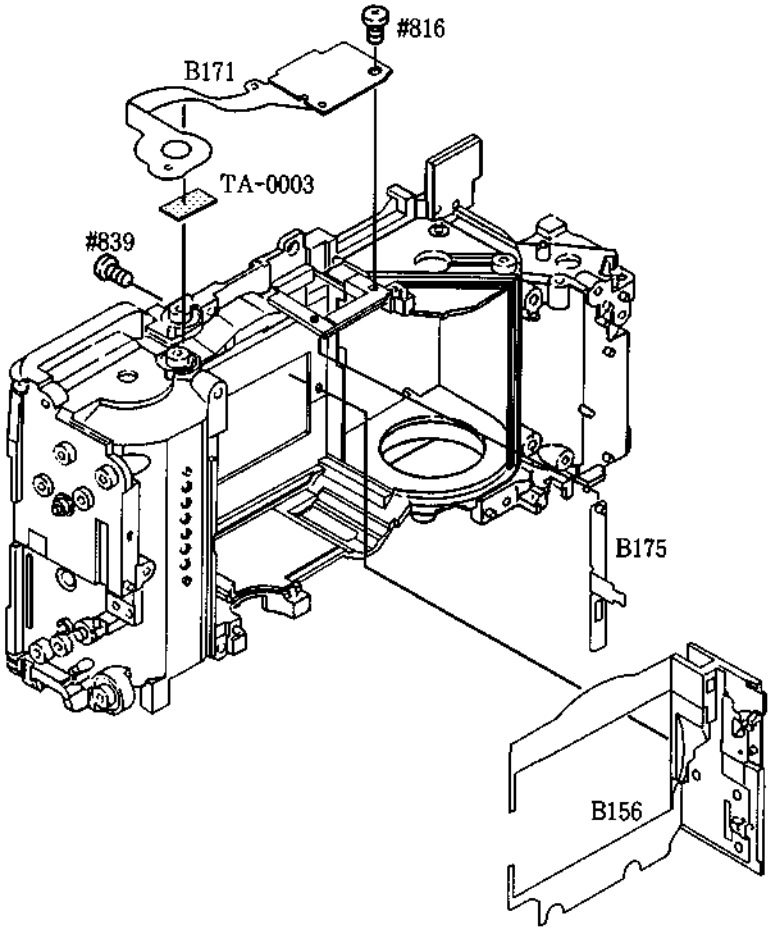


PANORAMA LEVER GROUP

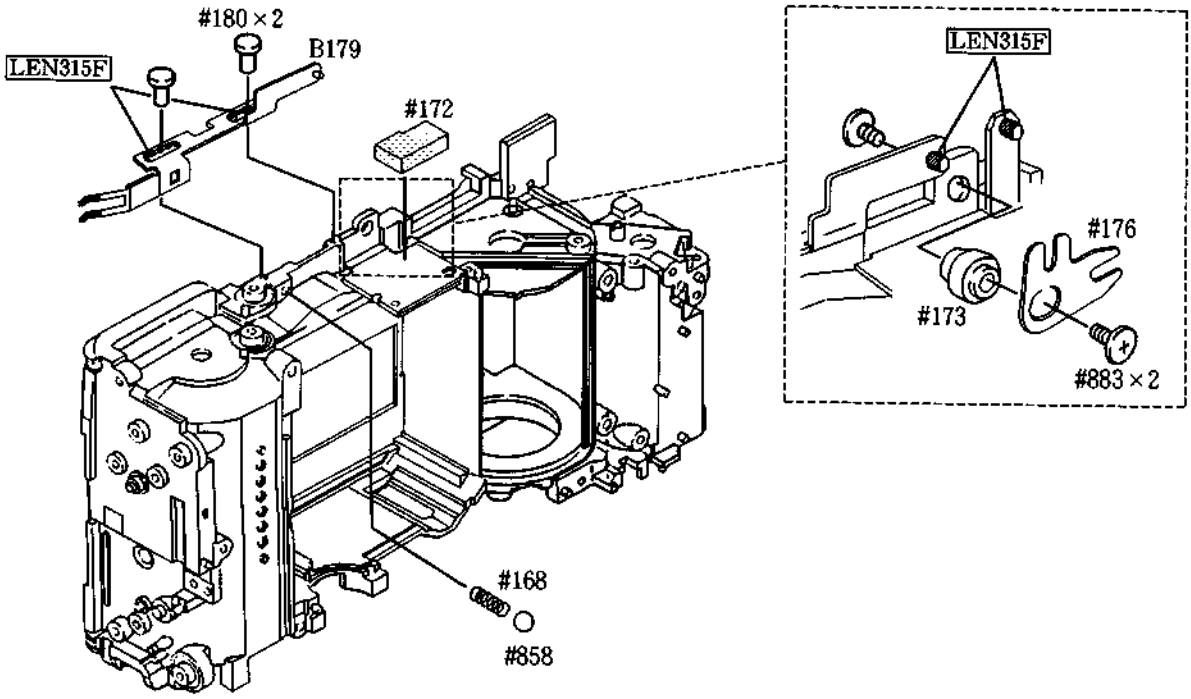

W／R MOTOR GROUP, W／R GEAR GROUP

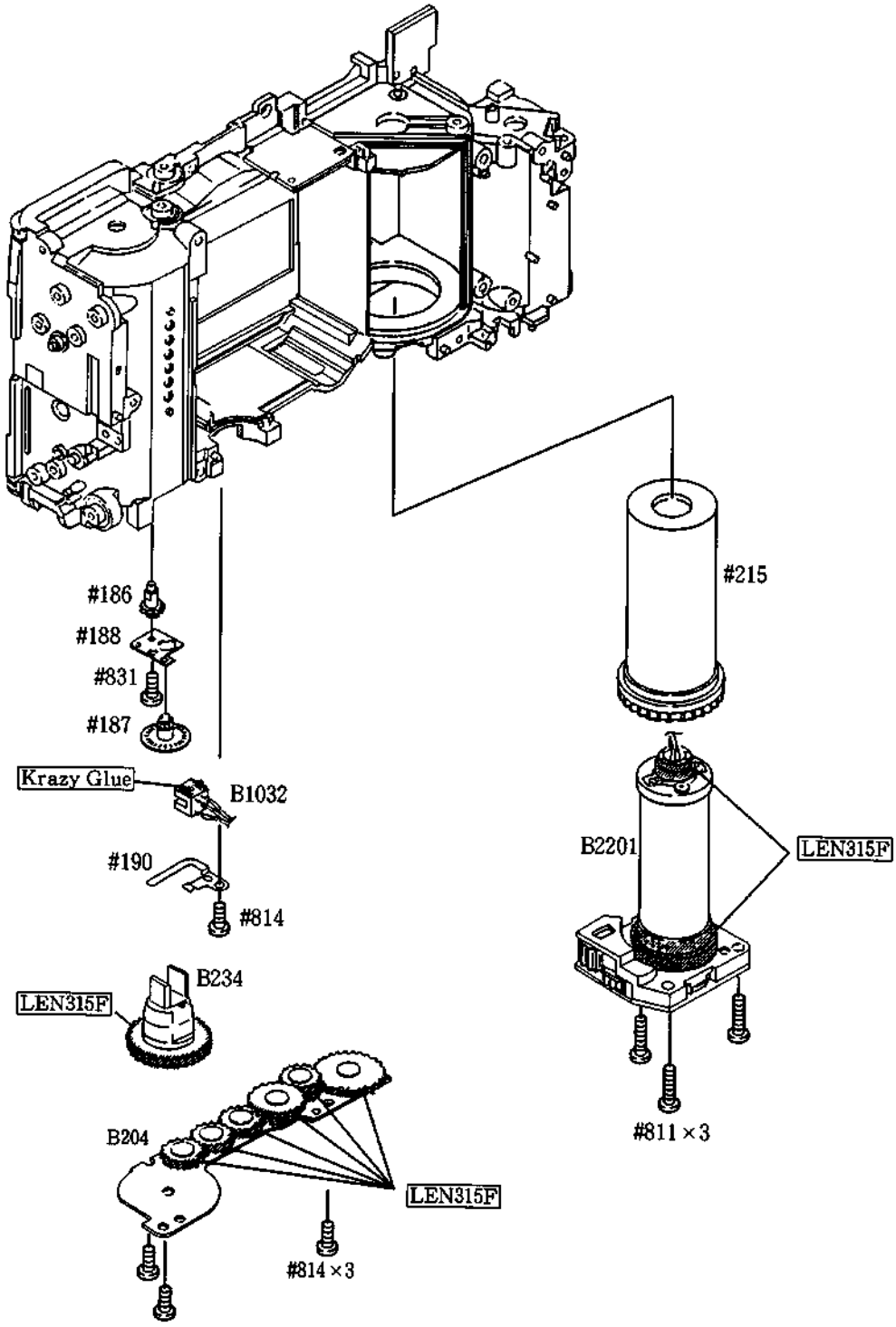

ALIGNING OF REAR BODY AND LENS BARREL UNIT

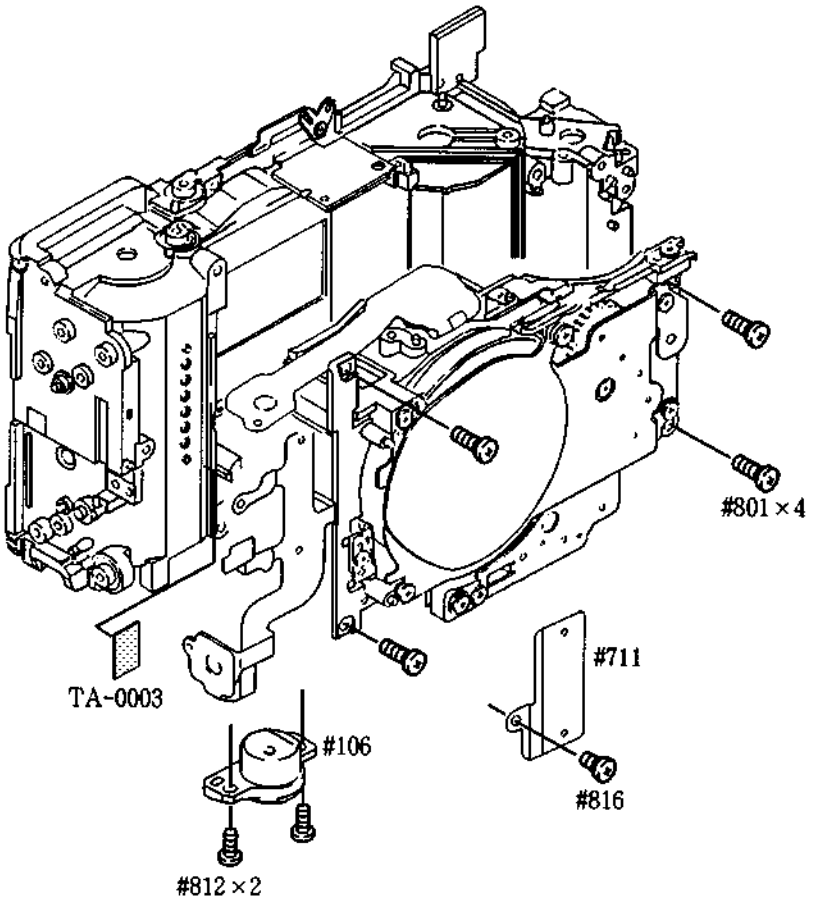


AF UNIT, FLASH BASE PLATE UNIT

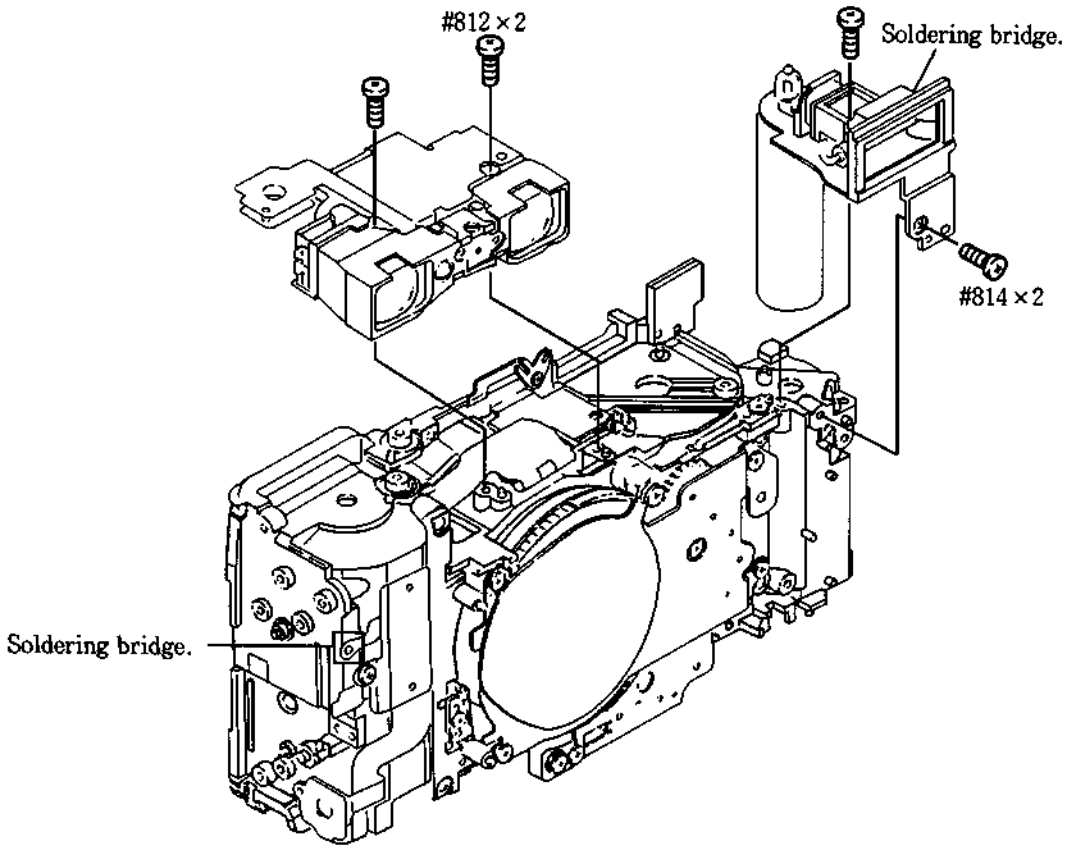

CAMERA BACK LOCK RELEASES

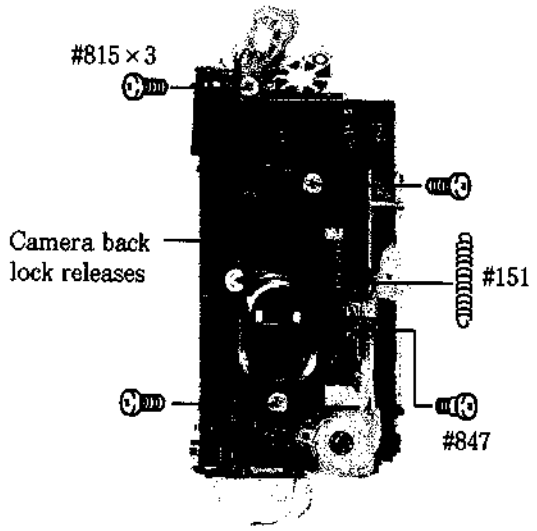


MAIN FPC

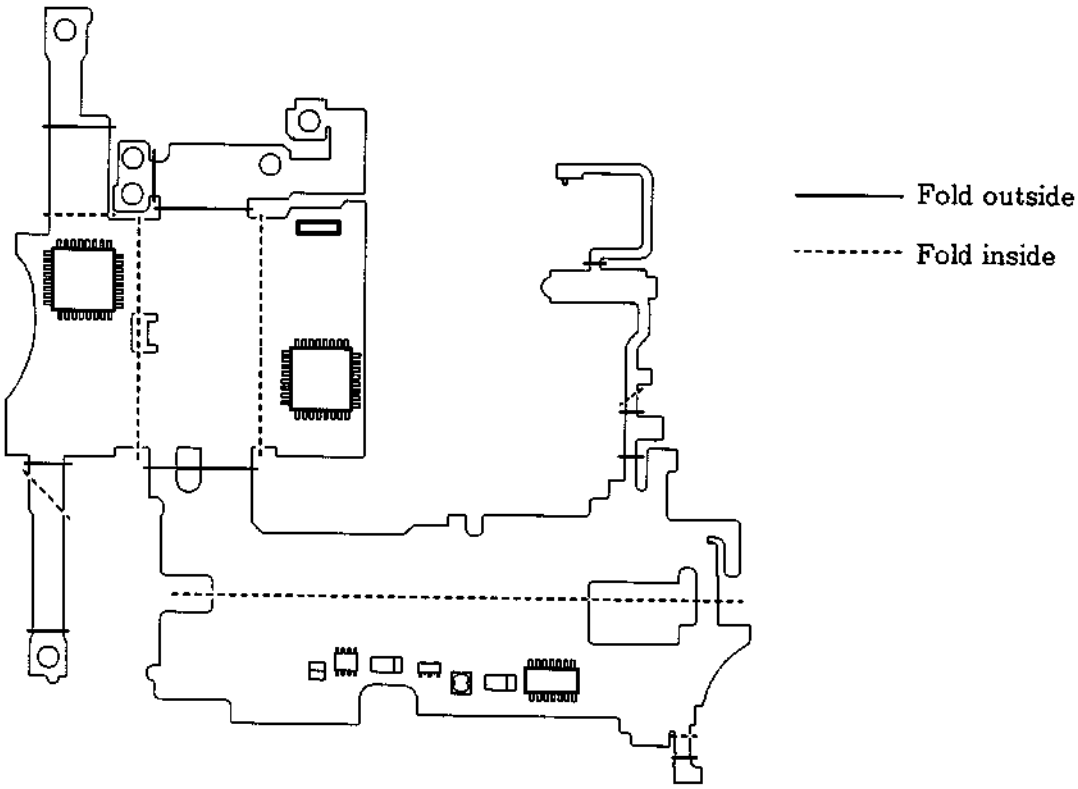

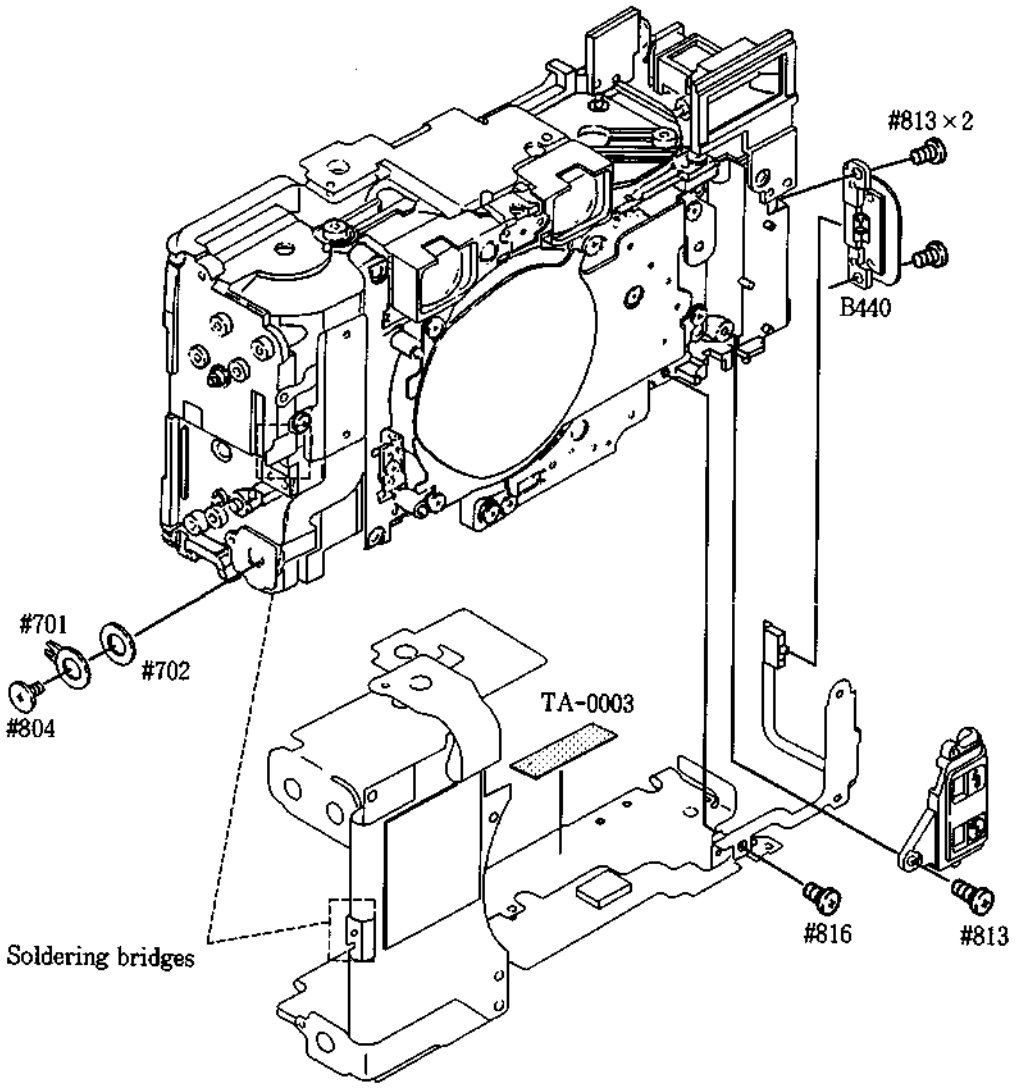
#813×2
B440
#701
#702
#804
TA-0003
Soldering bridges
#816
#813

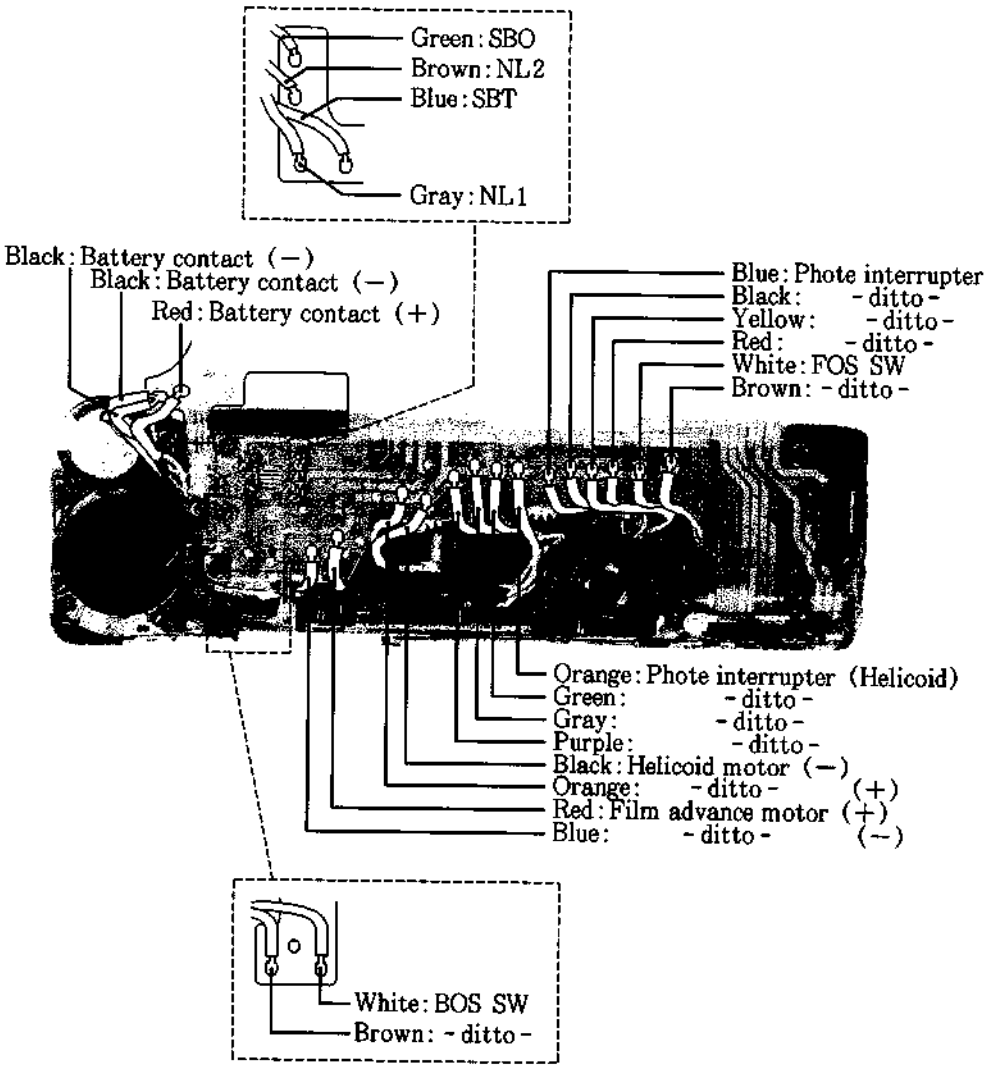
Green : SBO
Brown : NL2
Blue : SBT
Gray : NL1
Black : Battery contact (－)
Black : Battery contact (－)
Red : Battery contact (＋)
Blue : Phote interrupter
Black : - ditto -
Yellow : - ditto -
Red : - ditto -
White : FOS SW
Brown : - ditto -
Orange : Phote interrupter (Helicoid)
Green : - ditto -
Gray : - ditto -
Purple : - ditto -
Black : Helicoid motor (－)
Orange : - ditto - (＋)
Red : Film advance motor (＋)
Blue : - ditto - (－)
White : BOS SW
Brown : - ditto -

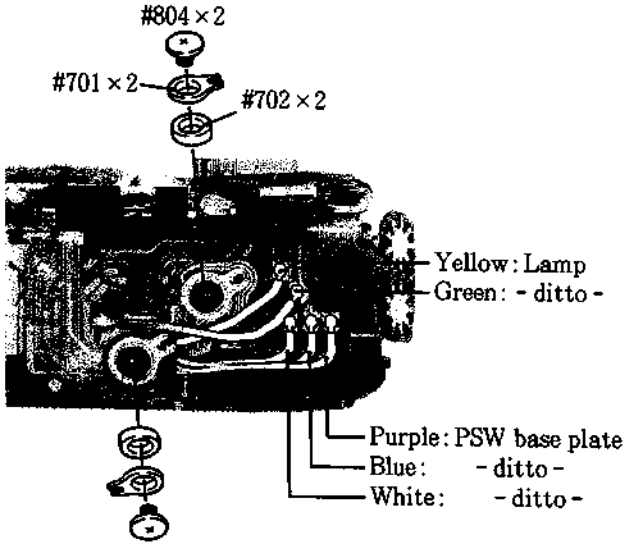
#804 × 2
#701 × 2
#702 × 2
Yellow : Lamp
Green : - ditto -
Purple : PSW base plate
Blue : - ditto -
White : - ditto -

VIEWFINDER GROUP, LCD UNIT

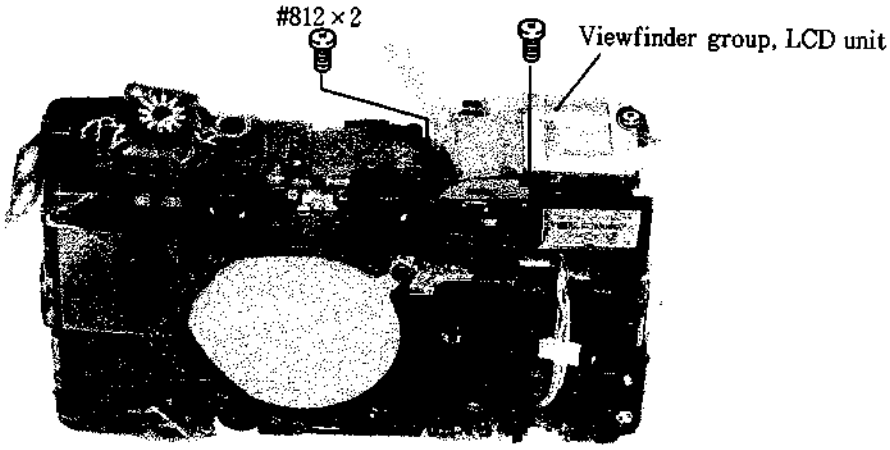


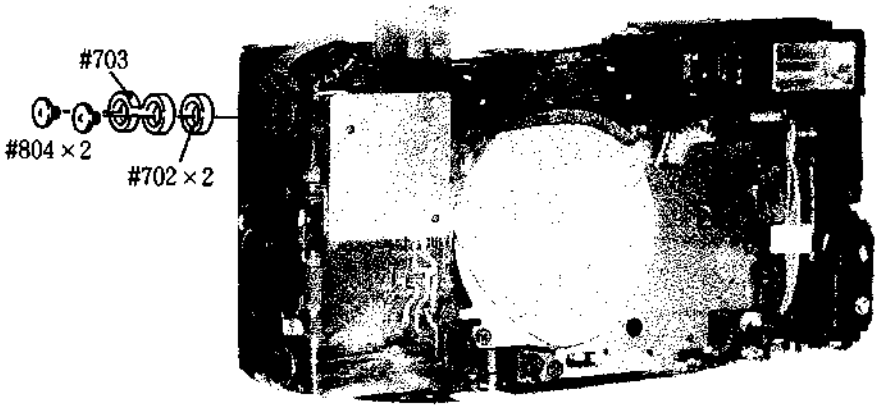


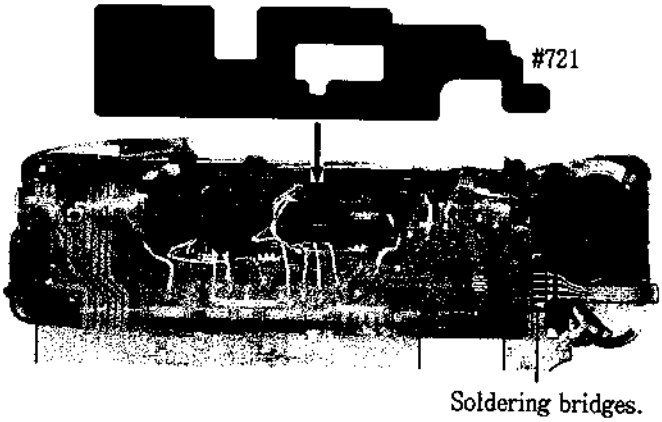


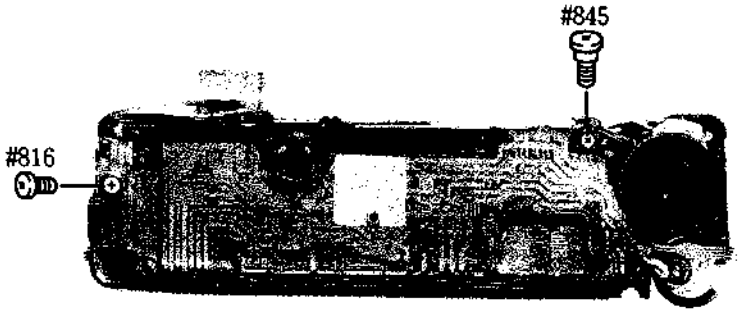

FRONT COVER

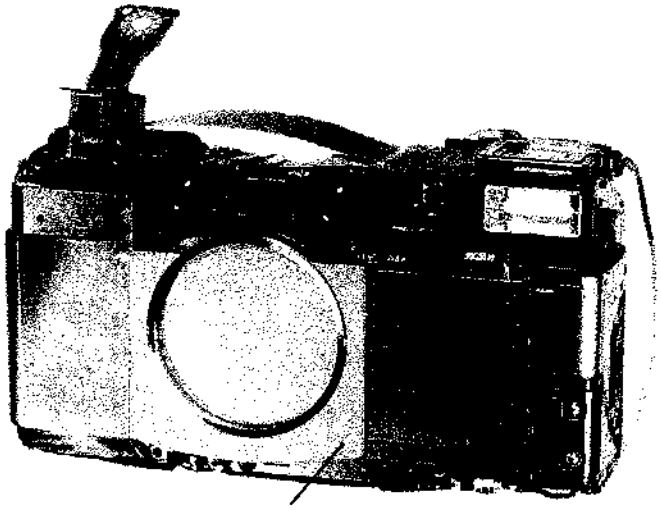


SIDE COVER

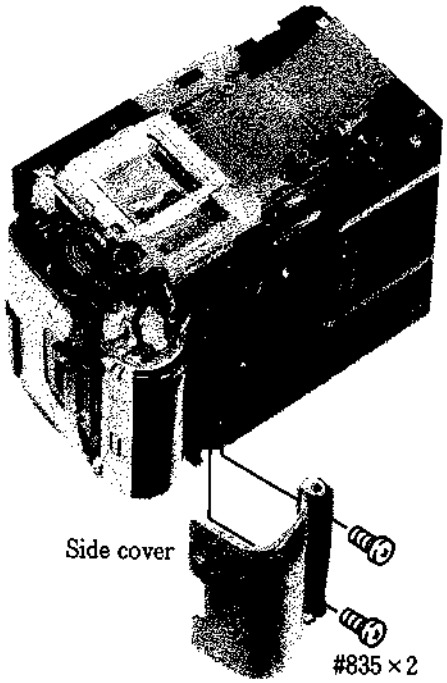

MODE SET UNIT, CAMERA BACK

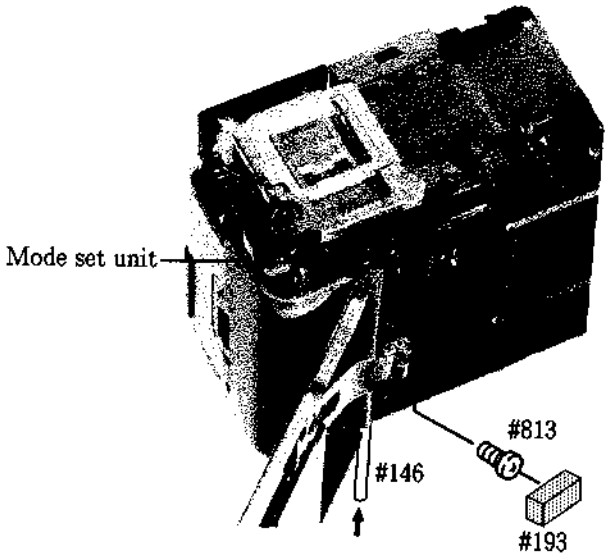


BOTTOM COVER

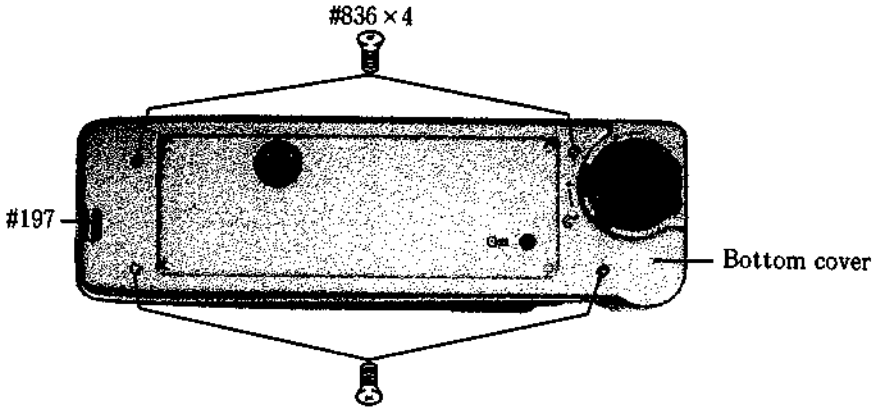


PRESS-CONTACT BETWEEN THE TOP COVER AND THE MAIN FPC

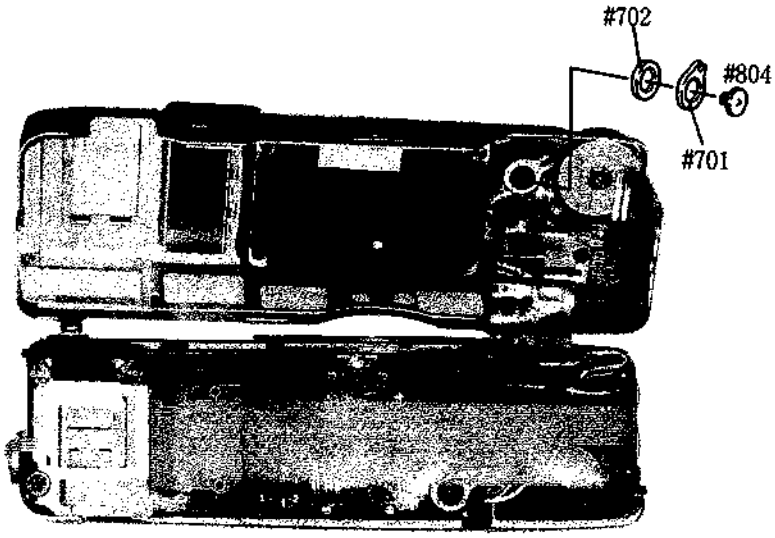

## INSPECTING CAMERA OPERATION

1. When battery is loaded and the battery chamber lid is closed, the word " OFF " appears on the LCD panel.

2. When the selector dial is set to P (from OFF), the lens cover opens and the lens moves forward. Then " E " appears on the LCD panel.

3. When the shutter pre-release switch is ON, the lens barrel moves forward. At the same time, the indicator on the AF side moves.

4. When pressing the shutter release button, the shutter can be released.

5. When the selector dial is set to OFF, the lens barrel retracts and the lens cover closes.

# ADJUSTMENT

• Contents

1. Adjustment of parallax
2. Adjustment of back focus
3. Adjustment of AE accuracy
4. Adjustment of AF accuracy
5. Adjustment of USA version

• Tools

1. J 19019 : Collimator ( 24LT-2DTS f =193.5mm)
2. J 15278 : Connector relay box
3. J 15291 : Adjusting stand
4. J 15314 : Data back contact connector tool
5. J 18236 : Checking and adjustment programs
6. J 18006 : Test chart
7. J 18033 : Focusing screen tool
8. NEC PC-9800 series personal computer

## ADJUSTMENT OF PARALLAX

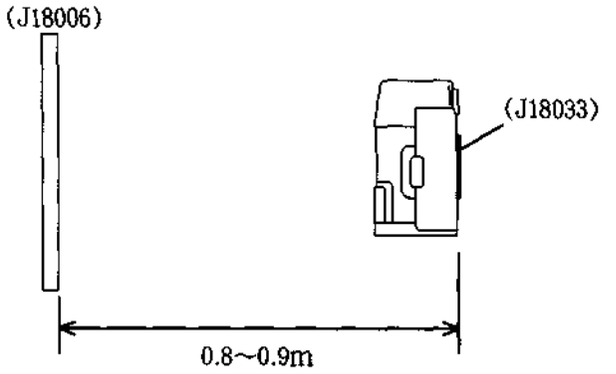


① Attach the focusing screen (J18033) to the camera's aperture surface.

② Set the camera in front of the test chart (J18006) placed at the set distance of 0.8 to 0.9m.

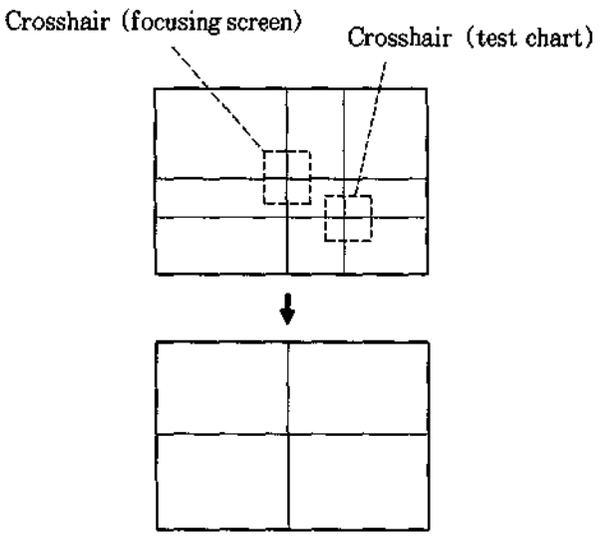


③ Set the selector dial to " T ", aperture dial to f/2.8, and distance scale to 0.85m, then release the shutter.

④ Adjust the camera position so that a crosshair on the focusing screen aligns with a crosshair (on the test chart) projected on the aperture surface.

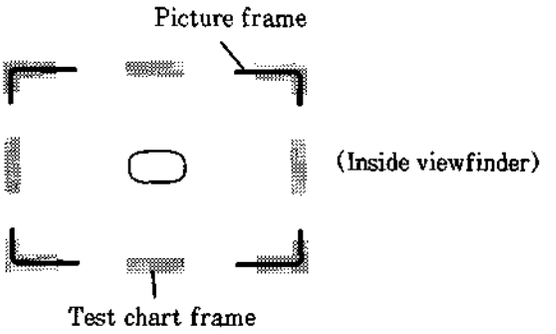


⑤ Unfasten screw #811 to adjust the LCD base plate so that the picture frame marks in the viewfinder line up with the test chart frames.

⑥ After adjustment, secure screw #811 with Screw Lock.

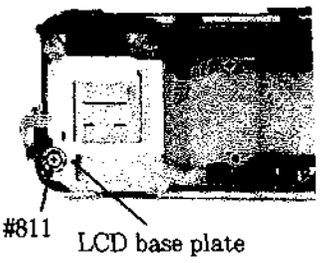

## ADJUSTMENT OF BACK FOCUS

Standard :
Value of FFD adjustment micro stand at step 1 should be within 0±40 μm.

① Rotate the objective lens of the collimator (J19019) to set the scale to " 0 " .

② Set the scale of the FFD adjustment micro stand (J15291) to " 0 " .

Location where vertical line color changes from blue to red.

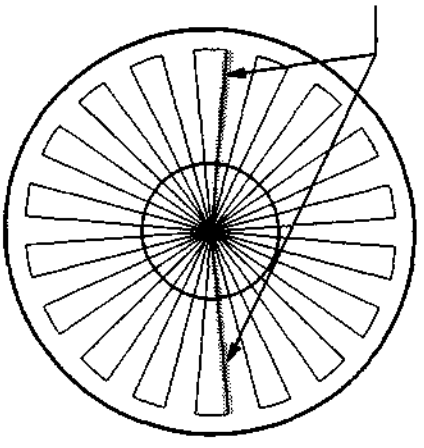

③ Adjustment as indicated on the computer display.

- Focus the collimator when the screen color of the collimator changes from blue to red.

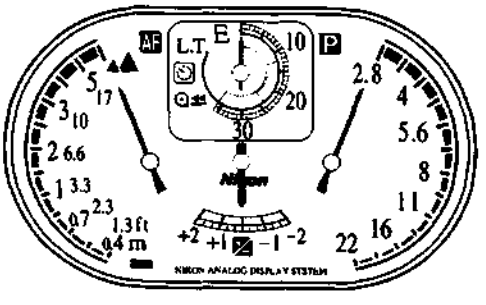


※ Normally, when you check back focus without using a personal computer, set the indicator on the aperture to 2.8, the indicator on the distance side to the small " ▲ " mark, and the selector dial to " T ", respectively, to make back focus adjustment.

## ADJUSTMENT OF AE ACCURACY, ADJUSTMENT OF AF ACCURACY

- Adjustment as indicated on the computer display.

(As for standard values, refer to "Inspection standard".)

## ADJUSTMENT OF USA VERSION

- Two types of cameras are available : the normal and USA versions. As shown in the figure below, the difference between the two is in the picture frame marks in the viewfinder. Main FPCs as a repair part will be provided based on the normal version.

**Note:**

**When replacing a main FPC in the USA version camera, after repair be sure to make adjustments based on the USA version.**

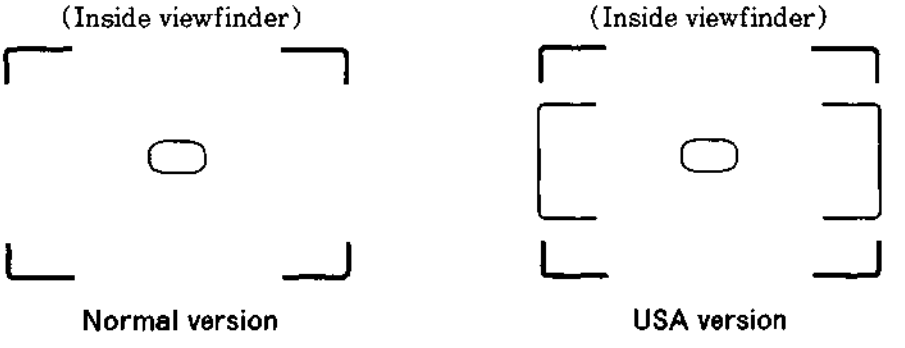


- When making adjustment, select the item 『 9. Setting of USA version 』 on the computer display, according to instructions.

**Note:** Do not attempt to modify the normal version to the USA version and vice versa.

TOP COVER

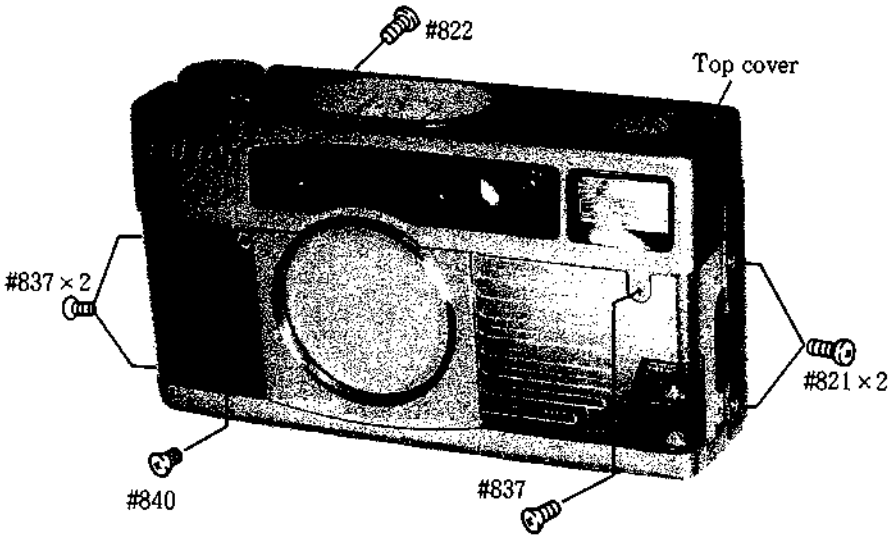


LEATHERETTE

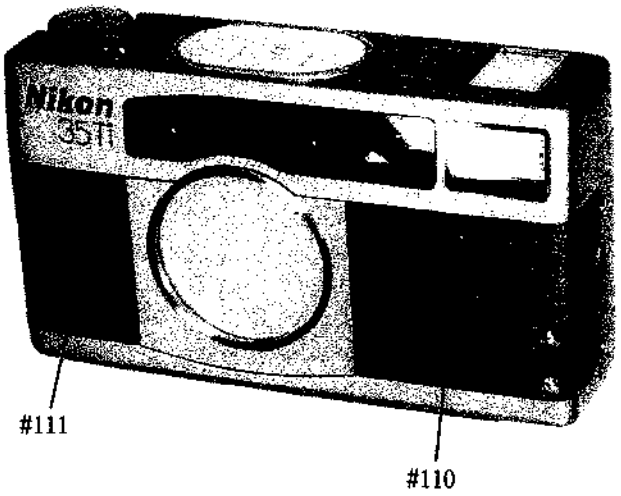

# Electric Circuit

## Outline

1. Electric Circuit ---------- E1

2. Configration ---------- E2

Switch Name Table ---------- E3

Check Land Table ---------- E4

IC Pin Table ---------- E5

Wiring Diagram ---------- E8

Circuit Diagram ---------- E9

Main FPC ---------- E10

Main FPC Checking Land ---------- E11

AF FPC ---------- E13

AF FPC Checking Land ---------- E14

EEPROM DATA ---------- E15

# Outline

## 1. Electric circuit

The following power sources are included in this electric circuit. Each power source and its description is shown below.

(1) VE (battery voltage) system
Power source for speedlight (SB)
Power source for film advance motor
Power source for driving lens barrel
Power source for driving stepping motor

(2) 1.2V system (U11 output) — for stopping speedlight charging (when battery voltage drops below 1.2V during charging speedlight or driving motor)

(3) 2.3V output (U12 output) — for checking the U2's battery. BC when U12 output voltage is lower than 2.3V.

(4) VDD (DC-DC input voltage) — input voltage for DC-DC converter. Power source for back light LEDs (D1, D2). IRED lights up dimly by power sources D1 and D2 when EV is lower than 3.5V due to the voltage drop of R3 only. While it lights up brightly when Ev is over 3.5V due to the voltage drop of both R3 and R2.

(5) 1.7V system (U8 output) — Power source for U2.

(6) VDD (5V) system (DC-DC output) — Power source for IC driving other than U2.

(7) 4V system (U10 output) — Reference voltage for the U1's A/D input.

Power activation occurrs in the following procedures:

1. The U2 is reset by the PSW (or the U2 is reset if power activation switch is turned ON when battery is loaded).
2. DC-DC converter is activated.
3. The U1 reset is released (by U2).
4. Waiting time (for stability of analog display CPU)
5. Battery check (BC) operation
   - Power activation switch (Refer to switch table.)

BC0 Checking if the voltage is over 2.15V with no loading.

BC1 Checking if the voltage is over 2.3V with 500mA loading (Electric current flows to the shutter driving stepping motor).

BC2 Checking if the voltage is over 2.15V with 500mA loading.

BC mark blinks on the LCD in the items BC1 and BC2 above. LCD goes out in the items BC2 and after.

## 2. Configuration

U1 — Performing camera's all sequence operations (including motor driving, shutter control, etc.) Performing data processing for AE and AF operations, shutter sequence operation, and various other data communication (for U2, U6, data back module, and inspection equipment).

U2 — Transferring data to analog display CPU. Controlling external LCD. Transferring code from the U1 after converting it to control code.

U3 — Driving film advance motor and lens barrel motor. Motor driver IC (controlled by the U1.) Driving amount of each motor can be controlled by pulse signals generated from each photo interrupter. Then the pulse signals are entered into the U1 and counted.

U4 — AF controlling IC. IRED constant current driving circuit and PSD input circuit are included. Infrared light emitted from the IRED is reflected on the object and the reflected light returns back to the PSD. The AF output signal is sent to the U1. Then the U1 calculates the driving amount of the lens.

U5 — IC for matrix exposure metering. SPD unit is included. Output from the 6-segment SPD is amplified by the head amp and transferred to the U1 in time sequence. Then the U1 calculates AE values from this output data.

## Switch Name Table

| NO | Code | Switch Name | PO | NO | Code | Switch Name | PO |
|---|---|---|---|---|---|---|---|
| 1 | BBS | Camera Back SWitch | ○ | 12 | AFS | Distance Set Switch | — |
| 2 | PSW | Battery-Case Switch | ○ | 13 | ECS | AE-Conpensation Switch | — |
| 3 | SLS | DataBack Select Switch | — | 14 | S1 | Pre-release Switch | ○ |
| 4 | AJS | DataBack Adjust Switch | — | 15 | MUS | Manual Rewind Switch | ○ |
| 5 | SDT | SelectDial Triger Switch | ○ | 16 | NRS | Flash-Inhibition SW | — |
| 6 | CRS | Command Dial 1 | ○ | 17 | SKS | Flash-Forced Switch | ○ |
| 7 | SD1 | Select Dial 1 | — | 18 | PSST | Panorama Set Triger | ○ |
| 8 | SD2 | Select Dial 2 | — | 19 | PTS | Red-eye-Reduction SW | — |
| 9 | CLS | Command Dial 2 | — | 20 | PSS | Panorama Set Switch | — |
| 10 | S2 | Release Switch | — | 21 | FOS | Focus Reset Switch | — |
| 11 | S3 | Self Switch | ○ | 22 | BOS | Barrier Open Switch | — |

SW —— Switch
PO —— Power On Switch
" ○" marked switches are "Power On Switch"

# Check Land Table

| Mein FPC | | |
|---|---|---|
| Land Name | Name of Signal | Conect |
| TPPSW | Battery Case Switch | PSW ← →R11 →U2 68p |
| TPSBO | SpeedLight ON-OFF | R10 ← →U1 42P |
| TPRESET | U1 Reset Signal | Q6C ← →R15,C12,U1 60p |
| TPNL2 | SB Safety Voltage Detect | Q15C← →U1 79p |
| TPAVREF | ReferenceVoltage for A/D | U10 3p,C15← →U1 75p |
| TPX2 | System Clock for U1 | X1← →U1 69p |
| TPXCS | U2 Serial Enable Signal | u2 20p← →U1 36p |
| TPVSSL | Power for LCD | C5← →U2 29p |
| TPCS | $E^2$PROM Chip Select | U1 10p← →R1,U6 3p |
| TPXRD | U2 Serial Data Output | U2 25p← →Q3B Q3C →U1 65p |
| TPSO | U2 Serial Data Input | U2 23p← →R7,R8 R8→U1 13p,U6 5p |
| TPSCK | U1-U2 Serial Clock | U2 26p← →R7,R8 R8 →U1 13p,U6 4p |
| TPSWT | Panorama Switch | U2 22p← →D5 anode、PSST |
| TP5V | 5 V Power Source | U7 Vout ← →U1,U3 ,PINT (Vdd) |
| TP6V | 6 V Power Source | →D1,D2, PowerSource for AF-Circuit |
| TPVE | Batery + Terminal | →Power for Motor |
| TP1.7V | 1. 7 V Power Source | →Power Source for U2 |
| TPR1.2V | 1. 2 V Power Source | →Q5B (SB Oscilation stop) |
| TPL1 | DC-DC Voltage-Up | L1,Q14 D← →Q14C |
| TPC9 | DC-DC Oscilation 1 | →C9,R5,Q14B |
| TPEXT | DC-DC Oscilation 2 | →C9,R5,U7 EXT |
| TPAGND | GND for Analog | ―――――― |
| TPDGND | GND for Digital | ―――――― |
| TPPGND | GND for Power | ―――――― |
| TPMUS | Manual U-Turn Switch | MUS ← →U1 20p,D5 |
| TPNRS | Flash Inhibit Switch | NRS ← →U1 22p |
| TPSKS | Flash Forced Switch | SKS ← →U1 23p,D5 |
| TPRDL | Red-eye Ruduction Lamp | RDL ← →Q13C |
| TPPTS | Red-eye Reduction Switch | PTS ← →U1 14p |
| TPCKIN | Clock for AF-Data | U4 16p、D3← →U1 49p |

| AEAF FPC | | |
|---|---|---|
| Land Name | Name of Signal | Conect |
| TPCH1 | AF CH1 Signal | U4 9p ← →C108 |
| TPCH2 | AF CH2 Signal | U4 2p ← →C109 |
| TPVCC | Power for U4 | U410p,L2,PSD 6p |
| TPIREDL | IRED Drive Signal | U4 17p← →R21,Q16B |
| TPIREDA | NC | →U4 19p |
| TPIREDC | NC | →U4 18p |

# IC Pin Table

CPU (μPD78052) U1

| NO | PORT | Name & Contact | NO | PORT | Name & Contact |
|---|---|---|---|---|---|
| 1 | P15 | B.C. Controll →1/2Q7B | 41 | P65 | Barrier Open Switch → BOS |
| 2 | P16 | U10 Controll →2/2Q7B | 42 | P66 | SpeedLightCharge → R10 |
| 3 | P17 | DX6 → R16→DX6 | 43 | P67 | NC |
| 4 | AVss | AGND | 44 | P30 | AMP ChannelChange →U5 10p |
| 5 | P130 | DX3 →1/4R17→DX3 | 45 | P31 | AMP RangeChange →U5 5p |
| 6 | P131 | DX2 →1/4R17→DX2 | 46 | P32 | AMP ChargeSignal →U5 4p |
| 7 | AVREF1 | NC | 47 | P33 | AMP OutputEnable →U5 7p |
| 8 | P70 | DX5 →1/4R17→DX5 | 48 | P34 | AF SerialSyncro. →U4 15p |
| 9 | P71 | DX1 →1/4R17→DX1 | 49 | P35 | AF SerialClock→D3→U4 16p |
| 10 | P72 | E²PROM ChipSelect U6 CS | 50 | P36 | AF SerialData →U4 14p |
| 11 | P20 | Serial Input 1/2Q3C | 51 | P37 | NC |
| 12 | P21 | Serial Output 1/2 R8 | 52 | P120 | Mg Drive →Shutter PO1 |
| 13 | P22 | Serial Clock 2/2 R8 | 53 | P121 | Mg Release→Shutter PO2 |
| 14 | P23 | Red-eye Reduction Switch → PTS | 54 | P122 | Mg Controll →Shutter CT1 |
| 15 | P24 | DX Comunucation →MKR | 55 | P123 | Mg Control2 →Shutter CT2 |
| 16 | P25 | Panorama Switch → PSS | 56 | P124 | MotorDriveSignal2 →U3 IN2 |
| 17 | P26 | Select Dial 1 → SD1 | 57 | P125 | MotorDriveSignal1 →U3 IN1 |
| 18 | P27 | Select Dial 2 → SD2 | 58 | P126 | MotorDriveSignalφ →U3 IN0 |
| 19 | P40 | Self Switch →S3 | 59 | P127 | Lens PI PowerSupply →Q10B |
| 20 | P41 | ManualRewind SW → MUS | 60 | RESET | → C12,R15,Q6C,TPRESET |
| 21 | P42 | AnalogDisplay IC (D1 Monitor) → Q1C | 61 | P00 | Shutter Open Detective → →ShutterIC PROUT |
| 22 | P43 | FlashInhibition SW→ NRS | 62 | P01 | Film PI Output→Film PI |
| 23 | P44 | Flash Forced SW → SKS | 63 | P02 | Lens PI Output→Lens PI |
| 24 | P45 | Distance Set Switch AFS | 64 | P03 | Focus Reset → FOS |
| 25 | P46 | AE-Conpensation → ECS | 65 | P04 | U2 SerialControl →2/2Q3C |
| 26 | P47 | NC | 66 | P05 | Release Switch →S2 |
| 27 | P50 | Command Dial 2 → CLS | 67 | P06 | Command Dial 1 → CRS |
| 28 | P51 | Pre-release Switch →S1 | 68 | Vdd | Vdd |
| 29 | P52 | VC forDB→DB VC(1/2Q10C) | 69 | X2 | →Crystal |
| 30 | P53 | DB Data Signal → DB D1 | 70 | X1 | →Crystal |
| 31 | P54 | ↓ →DB D23 | 71 | IC | GND |
| 32 | P55 | ↓ → DB D4 | 72 | XT2 | NC |
| 33 | Vss | GND | 73 | XT1 | AVdd |
| 34 | P56 | DB Data Signal →DB D56 | 74 | AVdd | AVdd |
| 35 | P57 | ↓ → DB D7 | 75 | AVREF0 | Reference Voltage for A/D →U10 3p |
| 36 | P60 | U2 Chip Enable →U2 20p | 76 | P10 | AMP-Output →U5 2p |
| 37 | P61 | Red-eye-ruduction Lamp Drive Signal →Q13B | 77 | P11 | B.C.Voltage Input |
| 38 | P62 | AnalogDisplayIlluminator Drive →Q12B | 78 | P12 | Ready Voltage Detective →Q7C |
| 39 | P63 | FinderIlluminatior Drive (Low intensity) →R3 | 79 | P13 | SpeedLight SaftyVoltage Detective →Q15C |
| 40 | P64 | FinderIlluminator Drive (High intensty) →Q2B | 80 | P14 | SpeedLight Trriger →Q9B |

DB —— Data Back PI —— Photo Interrupter
BC —— Battery Check Mg —Magnet

CPU (MSM64164) U2

| NO | PORT | Name & Contact | NO | PORT | Name & Contact |
|---|---|---|---|---|---|
| 1 | L2 | LCD Segment → LCD | 41 | VSS | GND |
| 2 | L3 | NC | 42 | VSS2 | Power for LCD →C6 |
| 3 | L4 | ↓ | 43 | VSS3 | Power for LCD →C7 |
| 4 | L5 | ↓ | 44 | C1 | Conect to C8 →C8 |
| 5 | L6 | LCD Segment → LCD | 45 | C2 | Conect to C8 →C8 |
| 6 | L7 | → LCD | 46 | L17 | LCD Segment → LCD |
| 7 | L8 | → LCD | 47 | L18 | → LCD |
| 8 | L9 | → LCD | 48 | L19 | → LCD |
| 9 | L10 | → LCD | 49 | L20 | → LCD |
| 10 | L11 | → LCD | 50 | L21 | → LCD |
| 11 | L12 | → LCD | 51 | L22 | → LCD |
| 12 | L13 | → LCD | 52 | L23 | → LCD |
| 13 | L14 | → LCD | 53 | L24 | → LCD |
| 14 | L15 | → LCD | 54 | L25 | → LCD |
| 15 | L16 | ↓ → LCD | 55 | P5.0 | → LCD |
| 16 | P2.0 | →(Analog DisplayCPU D1) Q1B | 56 | P5.1 | → LCD |
| 17 | P2.1 | → Analog Display CPU A | 57 | P5.2 | → LCD |
| 18 | P2.2 | → Analog Display CPU B | 58 | P5.3 | → LCD |
| 19 | P2.3 | → AnalogDisplayCPU RA2 | 59 | P6.0 | → LCD |
| 20 | P3.0 | U2 SerialEnable →U1 36p | 60 | P6.1 | → LCD |
| 21 | P3.1 | SD Trigger Switch → SDT | 61 | P6.2 | ↓ → LCD |
| 22 | P3.2 | SW WakeUp Signal →PSST | 62 | P6.3 | U1 Reset Output → Q6B |
| 23 | P3.3 | SerialData Input→ 1/2R7 | 63 | OSC2 | Clock(Conect to R12)→ R12 |
| 24 | P4.0 | SerialDataOutput→2/2Q3E | 64 | OSC1 | Clock(Conect to R12)→ R12 |
| 25 | P4.1 | U2 SerialControl→1/2Q3E | 65 | VDD | Vdd |
| 26 | P4.2 | DataComunication→ 2/2R7 | 66 | XT | CLock for Operation →X2 |
| 27 | P4.3 | 2.3VOutput →U12 1p | 67 | XT | Clock for Operation →X2 |
| 28 | BD | U7 ControlSignal→ U7 2p | 68 | RESET | Reset Input → U7 3p |
| 29 | VSSL | Power for LCD →C5 | 69 | TEST1 | NC |
| 30 | VDD | Vdd | 70 | TEST2 | NC |
| 31 | RTO | NC | 71 | P1.0 | → Analog Display CPU C |
| 32 | CRTO | ↓ | 72 | P1.1 | → Analog Display CPU D |
| 33 | RSO | ↓ | 73 | P1.2 | → Analog Display CPU K |
| 34 | CSO | ↓ | 74 | P1.3 | NC |
| 35 | IND | ↓ | 75 | P0.0 | NC |
| 36 | INI | ↓ | 76 | P0.1 | Camera Back Switch → BBS |
| 37 | CSI | ↓ | 77 | P0.2 | DataBack Adjust SW → AJS |
| 38 | RSI | ↓ | 78 | P0.3 | DataBack Select SW → SLS |
| 39 | RTI | ↓ | 79 | L0 | LCD Segment → LCD |
| 40 | VSSI | GND | 80 | L1 | ↓ → LCD |

AF (IR3S79) U4

| NO | PORT | Name & Contact | NO | PORT | Name & Contact |
|---|---|---|---|---|---|
| 1 | GND | GND | 11 | TEST1 | NC |
| 2 | CH2 | Conect to C109 →C109 | 12 | TEST2 | NC |
| 3 | PSDR2 | NC | 13 | CINT | For Integer → C20 |
| 4 | PSDC2 | NC | 14 | DATA | Data In-Output →U1 50p |
| 5 | PSDL2 | PSD Input(Near) →PSD1 | 15 | CTRL | Control →U1 48p |
| 6 | PSDL1 | PSD Input(Far) →PSD4 | 16 | CKIN | Clock →D3→U1 49p |
| 7 | PSDC1 | NC | 17 | IREDI | IRED Drive →Q16B |
| 8 | PSDR1 | NC | 18 | IREDC | NC |
| 9 | CH1 | Conect to C108 →C108 | 19 | IREDR | NC |
| 10 | VCC | Vcc | 20 | FB | IRED Current Control→D6 K |

AEIC (M52960FP) U5

| NO | PORT | Name & Contact | NO | PORT | Name & Contact |
|---|---|---|---|---|---|
| 1 | VREF | NC | 6 | TEST | NC |
| 2 | VOUT | Metering Output →U1 76p | 7 | CS | Chip Select →U1 47p |
| 3 | VCC | Vcc | 8 | DGND | GND |
| 4 | CHG | Charge Signal →U1 46p | 9 | AGND | GND |
| 5 | LS | Range Change →U1 45p | 10 | CLK | Clock for Output →U1 44p |

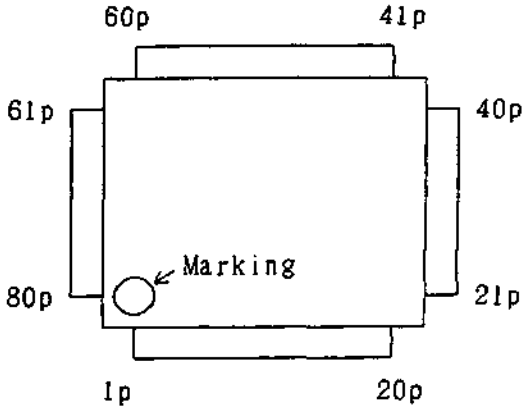


U1. U2 Pin Number

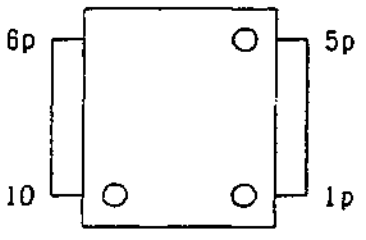


U5 Pin Number

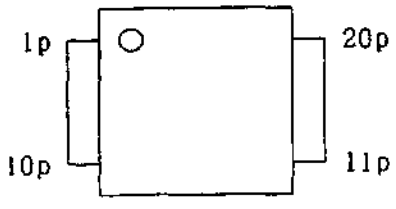


U4 Pin Number

# 実体配線図 Wiring Diagram

FCA22001-R. 3339. A

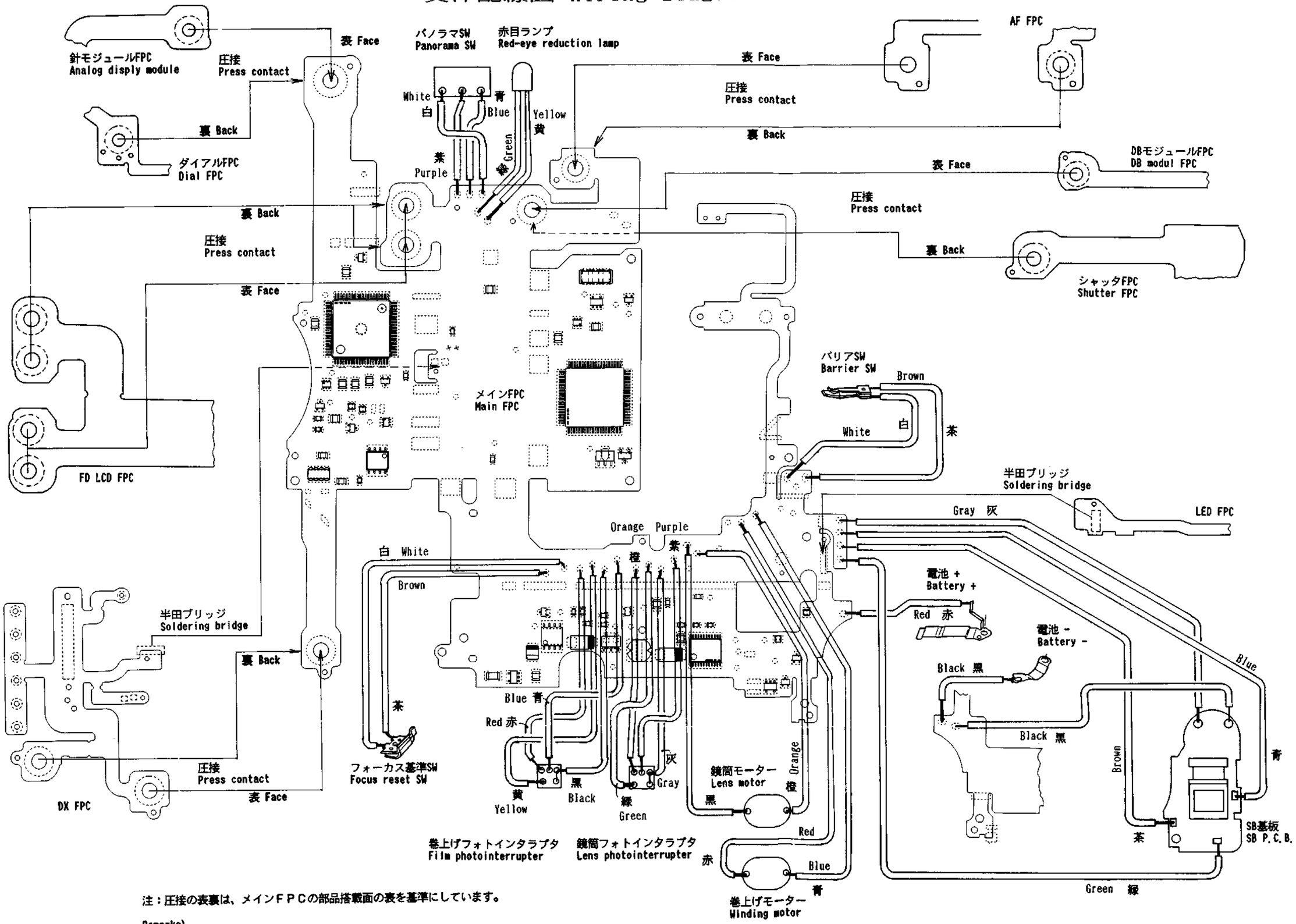


注：圧接の表裏は、メインＦＰＣの部品搭載面の表を基準にしています。

Remarks)
Regarding the instruction for press contact, the side loaded with Main FPC

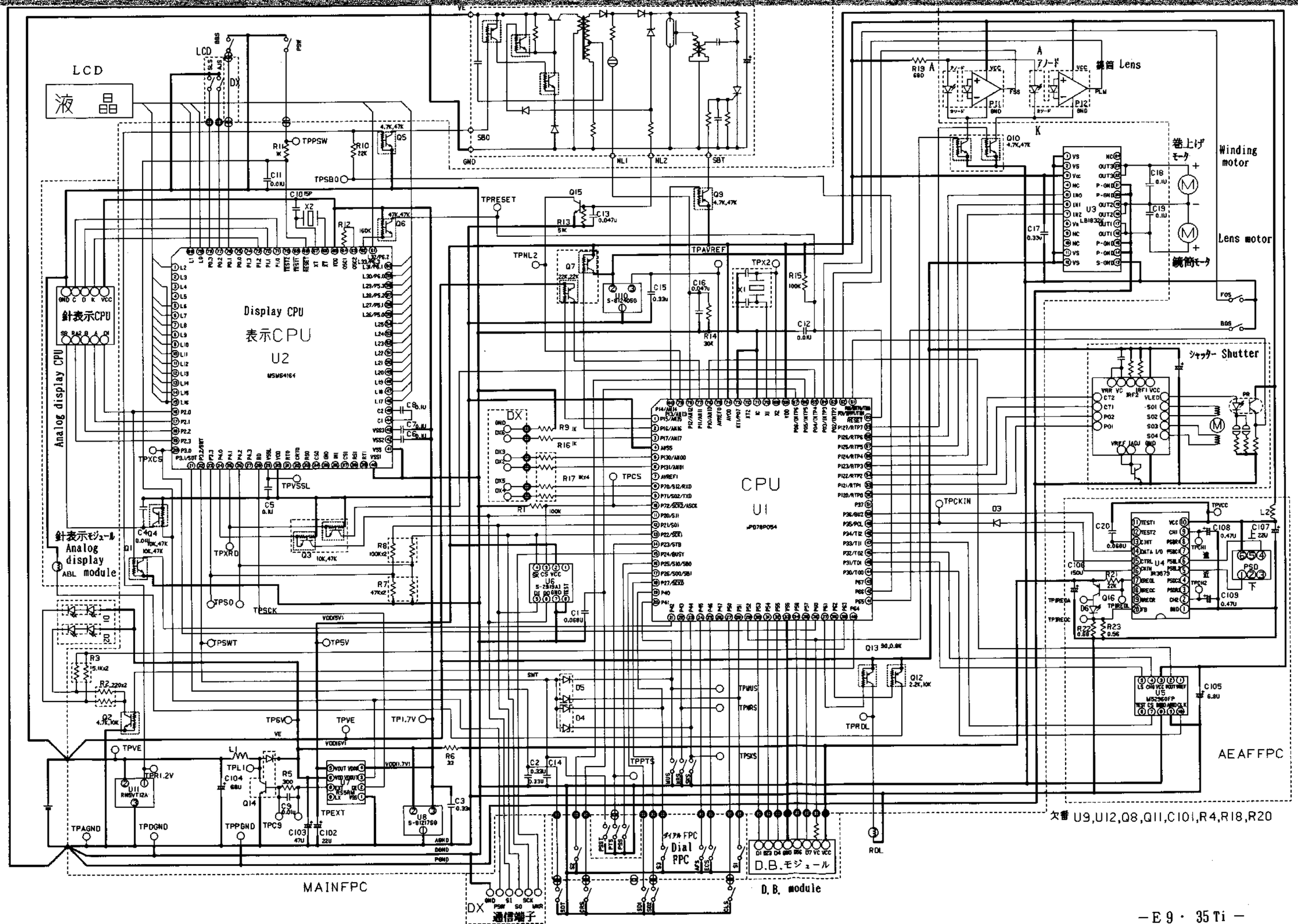
LCD
液晶
Display CPU
表示CPU
U2
針表示CPU
Analog display CPU
針表示モジュール
Analog display module
CPU
U1
シャッター Shutter
Winding motor
巻上げモータ
Lens motor
鏡筒モータ
鏡筒 Lens
AEAFFPC
MAINFPC
D.B. module
D.B.モジュール
ダイアルFPC
Dial FPC
通信端子
欠番 U9,U12,Q8,Q11,C101,R4,R18,R20

# メインＦＰＣ実装図
Main FPC

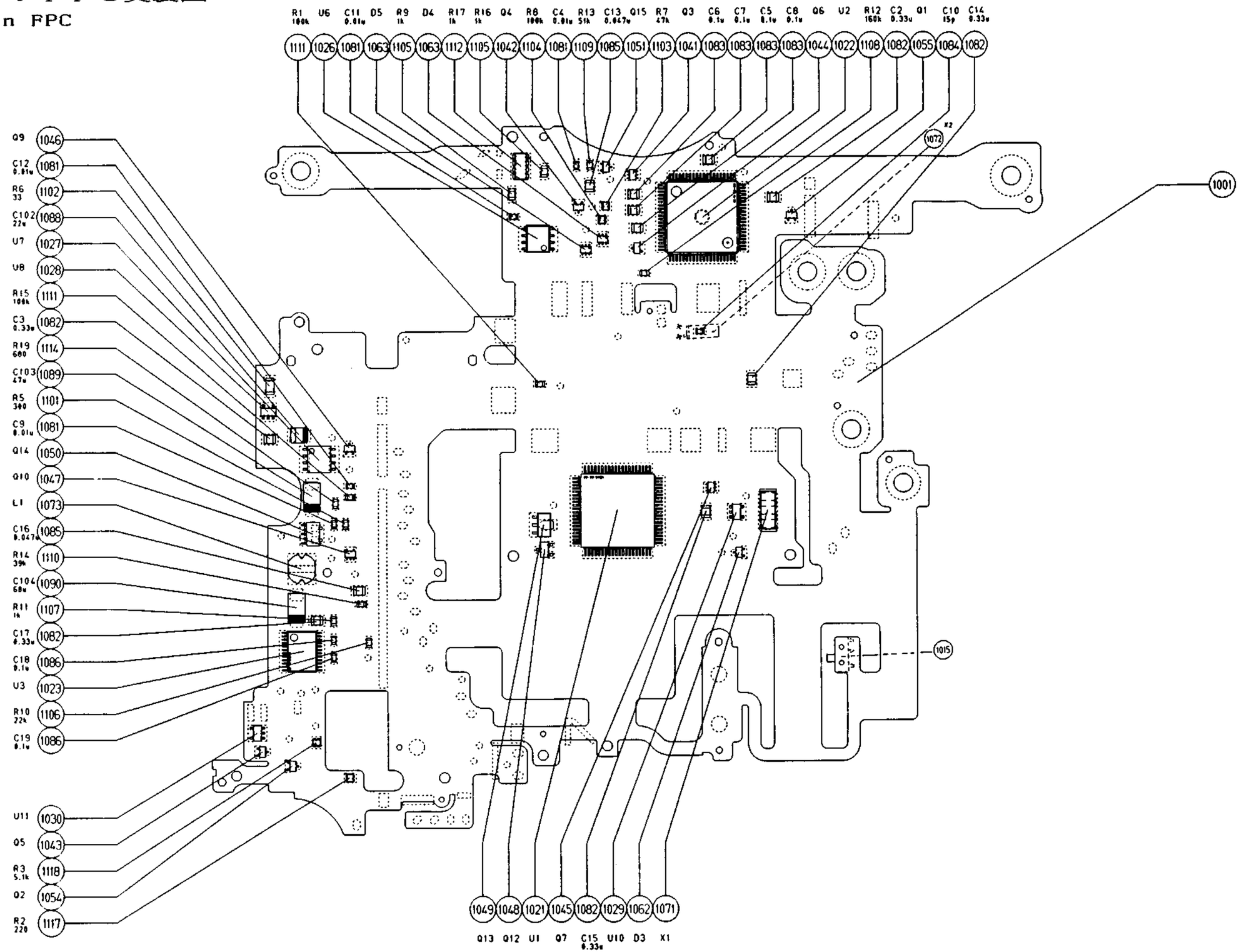

メインＦＰＣチェックランド図
Main FPC Checking Lands

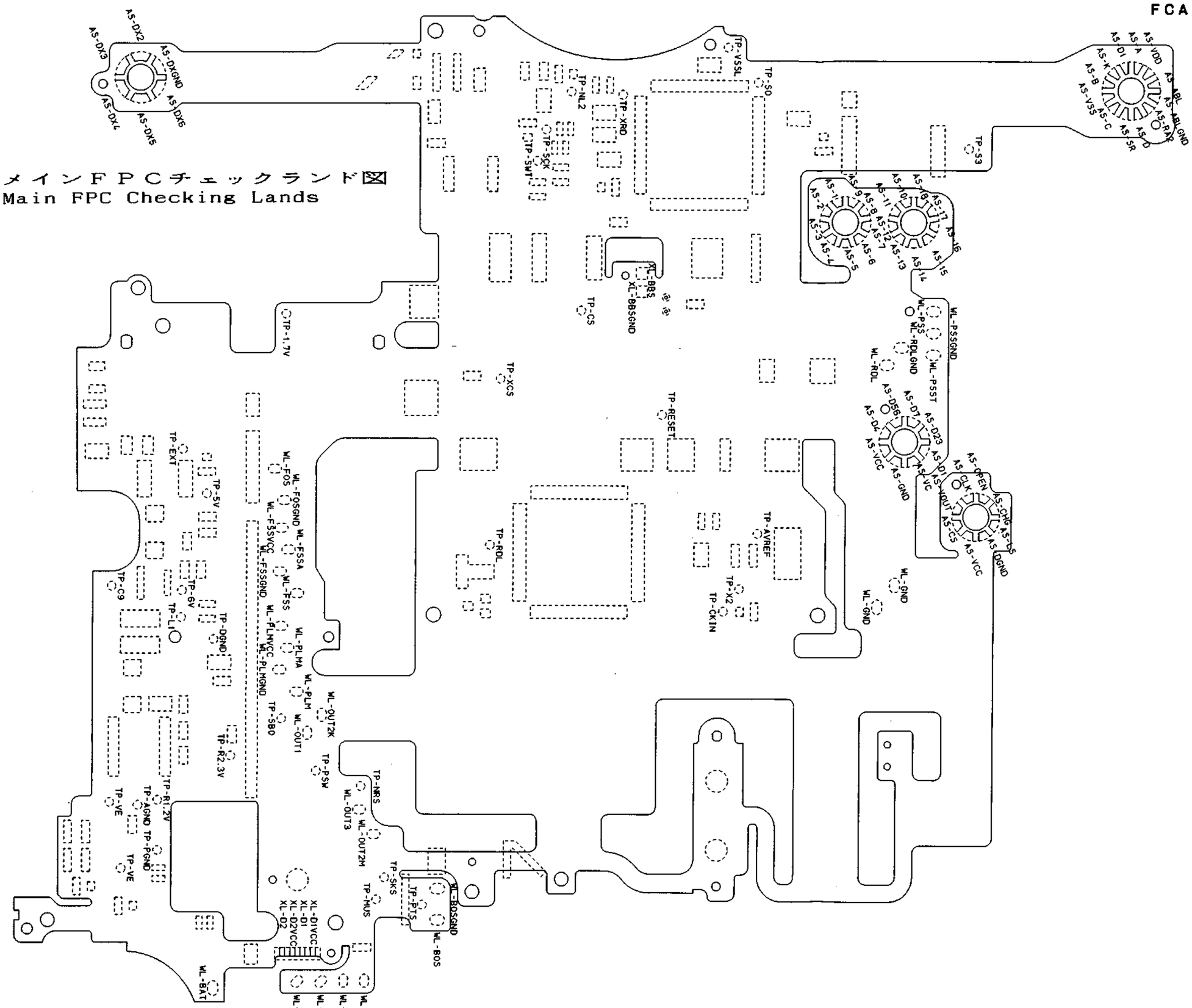

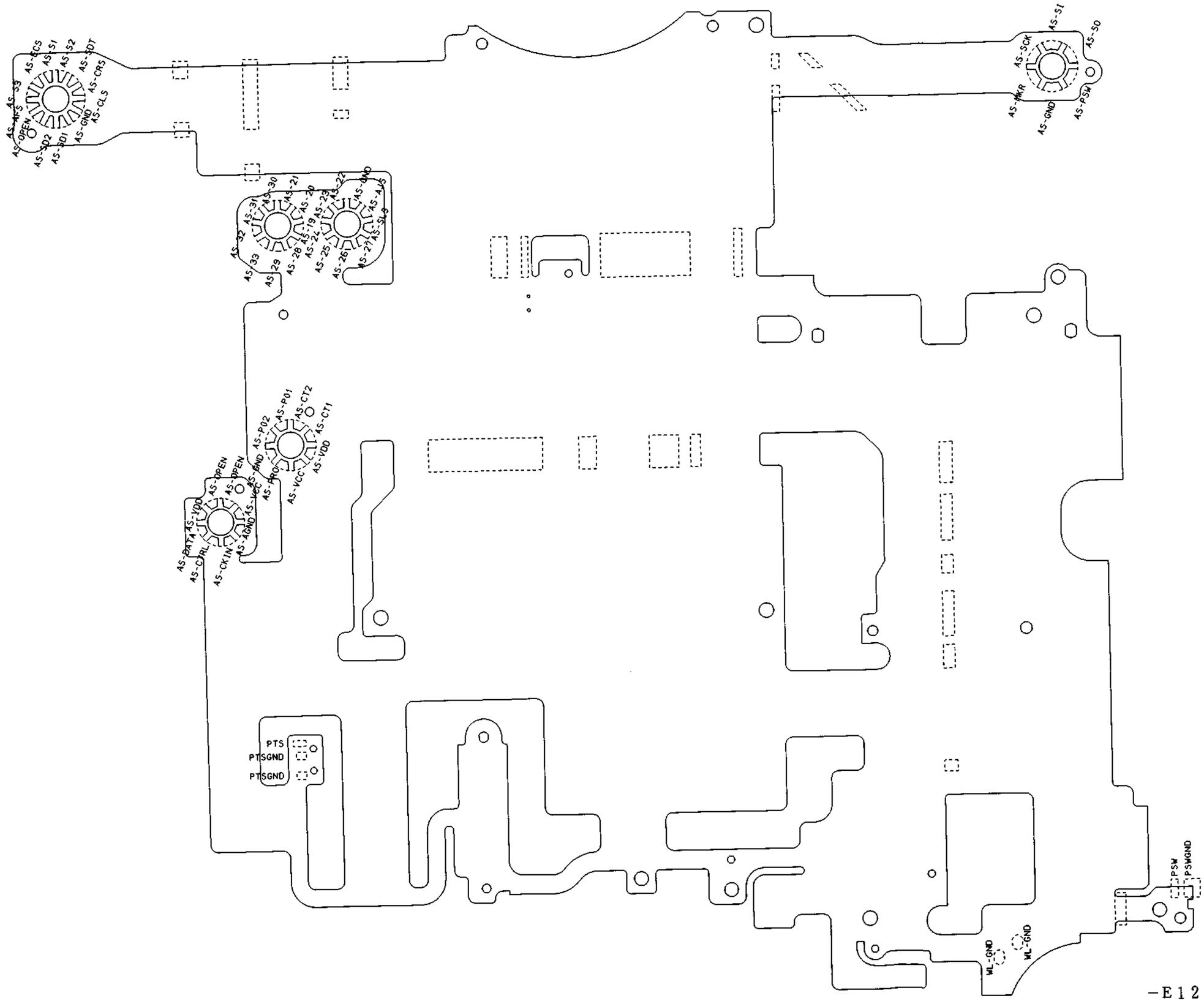
AS-ECS
AS-S1
AS-S2
AS-SDT
AS-CRS
AS-CLS
AS-GND
AS-SD1
AS-SD2
AS-OPEN
AS-S3
AS-SCK
AS-S1
AS-S0
AS-PSW
AS-GND
AS-MKR
AS-31
AS-30
AS-21
AS-20
AS-23
AS-22
AS-GND
AS-AJS
AS-SL3
AS-32
AS-33
AS-29
AS-28
AS-19
AS-24
AS-25
AS-26
AS-27
AS-P01
AS-CT2
AS-CT1
AS-VDD
AS-VCC
AS-PRO
AS-GND
AS-P02
AS-OPEN
AS-OPEN
AS-VCC
AS-AGND
AS-CKIN
AS-CTRL
AS-DATA
AS-VDD
PTS
PTSGND
PTSGND
PSW
PSWGND
WL-GND
WL-GND

AF FPC

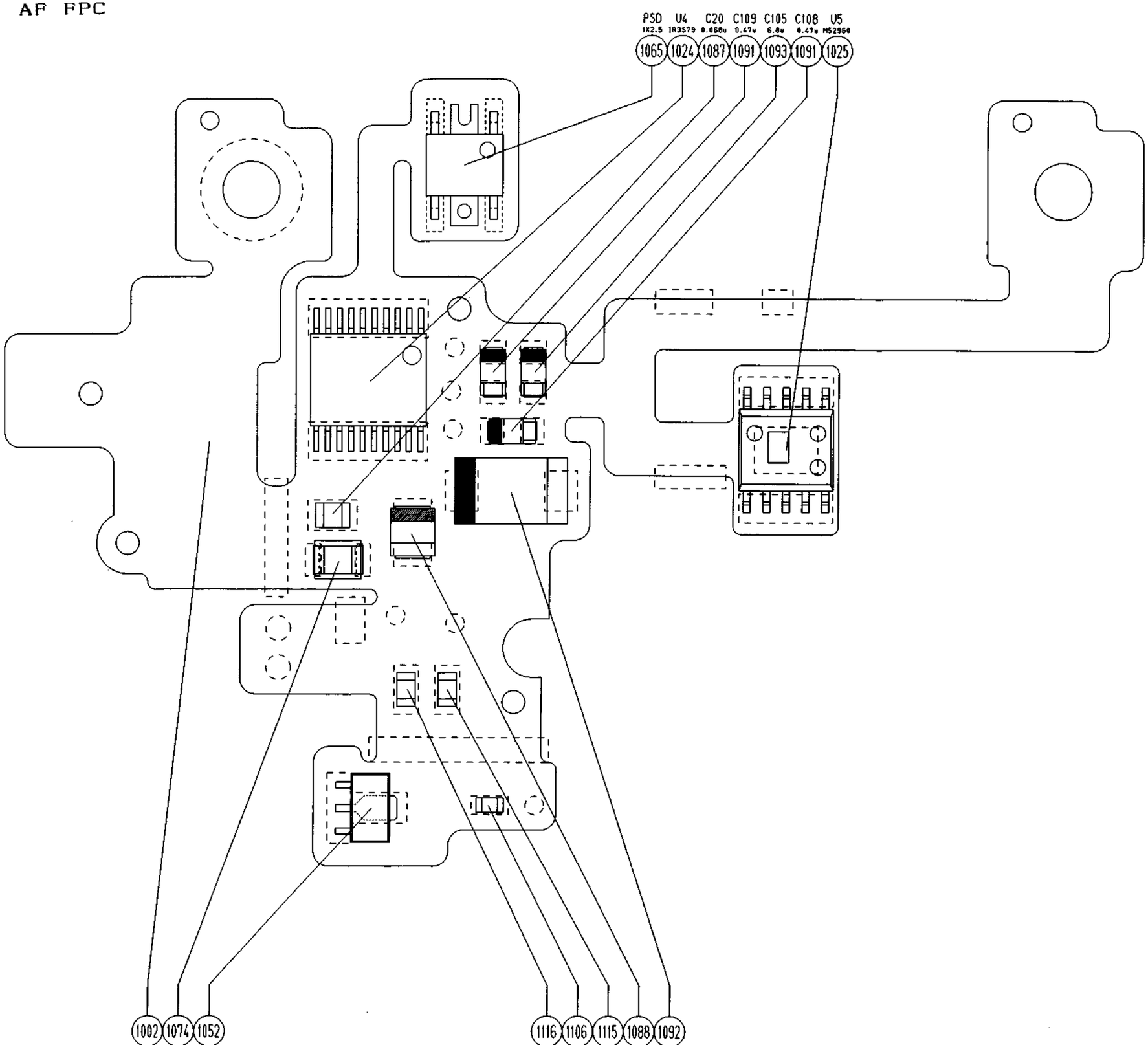
P5D
1X2.5
U4
IR3579
C20
0.068u
C109
0.47u
C105
6.8u
C108
0.47u
U5
MS2960
1065
1024
1087
1091
1093
1091
1025
1002
1074
1052
1116
1106
1115
1088
1092

ＡＦ ＦＰＣ チェックランド図
AF FPC Checking Lands

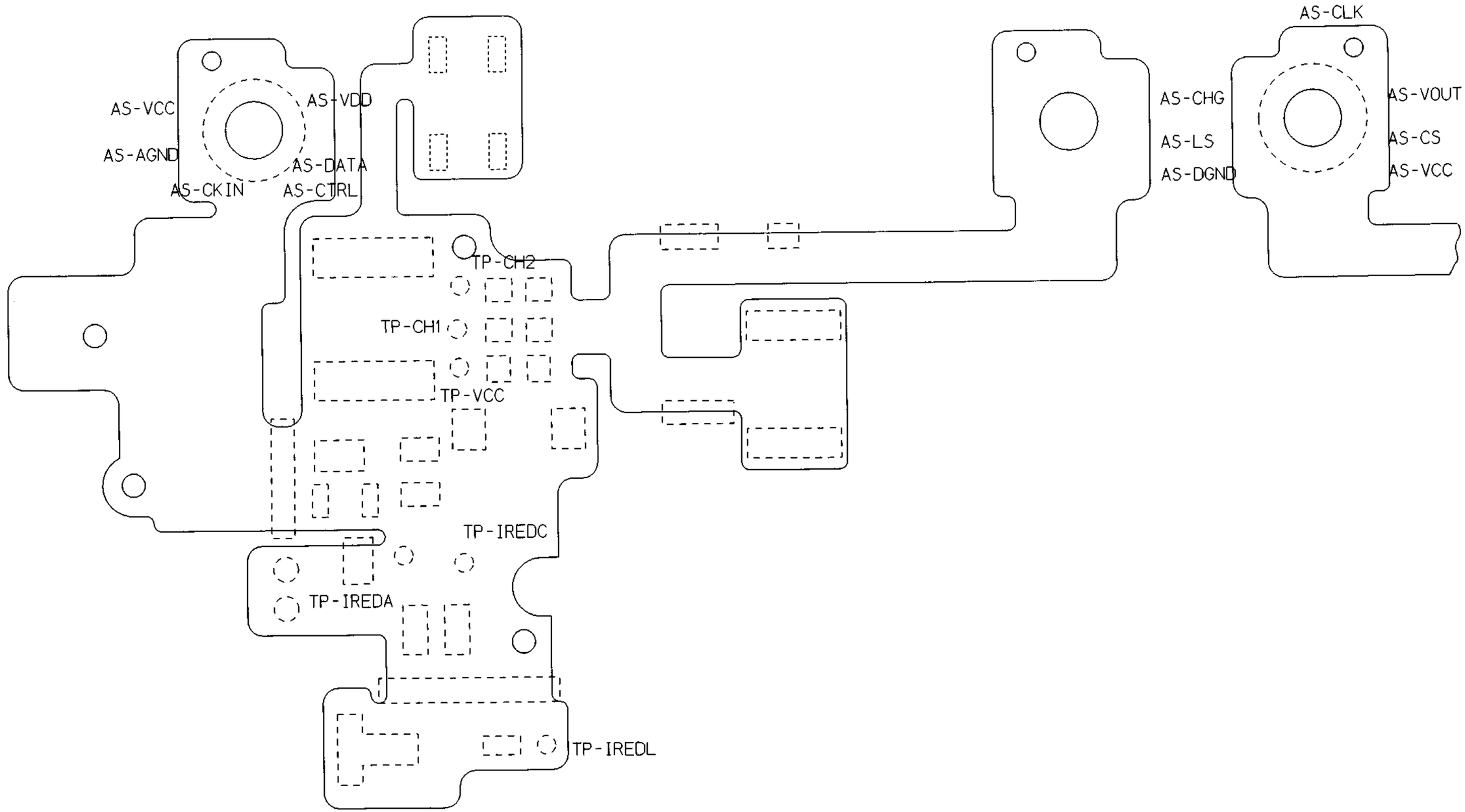

# E² PROM DATA

| Address, type of data | | Data | | Upper | Lower |
|---|---|---|---|---|---|
| 0 | (0H) A | Shutter release time | | | |
| 1 | (1H) A | Lens pulse counter | Film counter | | |
| 2 | (2H) -- | US version switch | Module analogue display (Fixed) | | 3 |
| 3 | (3H) A | PA mode<br>Present position | AF mode<br>Present position of | | |
| 4 | (4H) A | Counter mode<br>Present position | + / - mode<br>Present position | | |
| 5 | (5H) A | | Keep selection of CF mode | | |
| 6 | (6H) A | Keep previous month data | Keep previous day data | | |
| 7 | (7H) A | | Keep previous day year | | |
| 8 | (8H) Fixed | Judgment of rewind time | | 8 | 2 |
| 9 | (9H) Fixed | Shutter control | | 79 | 00 |
| 10 | (AH) Fixe | Shutter control | Shutter control | 23 | 30 |
| 11 | (BH) Fixe | Shutter control | Shutter control | 46 | 38 |
| 12 | (CH) Fixe | Film supply control | Film supply control | 80 | 3 |
| 13 | (DH) Fixe | Data back control | | 40 | 37 |
| 14 | (EH) ADJ. | AF correction value r | AF correction value r | | |
| 15 | (FH) --- | AF level value (Fixed) | AF shift value (ADJ.) | 44 | |
| 16 | (10H) Fixe | Lens varrel control | | 24 | 00 |
| 17 | (11H) Fixed | Lens varrel control | | 7 | 135 |
| 18 | (12H) Fixed | Lens varrel control | | 00 | 251 |
| 19 | (13H) Fixed | Lens varrel control | | 100 | 25 |
| 20 | (14H) Fixed | Lens varrel control | | 56 | 52 |
| 21 | (15H) Fixed | Lens varrel control | | 60 | 19 |
| 22 | (16H) Fixed | Pre-release timer control | Shutter control | 4 | 10 |
| 23 | (17H) Fixed | Shutter control | Shutter control | 46 | 46 |
| 24 | (18H) ---- | Shutter exposure control (ADJ.) | Shutter control (Fixed) | | 62 |
| 25 | (19H) ADJ. | Lens barrel pulse shift (BP) | | | |
| 26 | (1AH) ---- | Exposure control (ADJ.) | SB charger control (Fixed) | | 20 |
| 27 | (1BH) ADJ. | BC level 2 | BC level 1 | | |
| 28 | (1CH) ADJ. | BV shift 2 | BV shift 1 | | |

| Address, type of data | | Data | | Upper | Lower |
|---|---|---|---|---|---|
| 29 | (1DH) ADJ. | BV shift 4 | BV shift 3 | | |
| 30 | (1EH) ADJ. | BV shift 6 | BV shift 5 | | |
| 31 | (1FH) ADJ. | un-use | BV r | 00 | |
| 32 | (20H) Fixe | BL | AP control | 36 | 82 |
| 33 | (21H) Fixed | AE control | BL | 00 | 78 |
| 34 | (22H) Fixed | AE control | AE control | 00 | 00 |
| 35 | (23H) Fixed | AE control | AE control | 00 | 00 |
| 36 | (24H) Fixed | AE control | AE control | 00 | 00 |
| 37 | (25H) Fixed | Shutter control | shutter control | 21 | 26 |
| 38 | (26H) Fixed | FM control | Shutter control | 82 | 23 |
| 39 | (27H) Fixed | AP | | 00 | 00 |
| 40 | (28H) Fixed | lens barrel control | | 00 | 00 |
| 41 | (29H) | For production stage | | | |
| | \| | \| | | | |
| 63 | (3FH) | For production stage | | | |

Notes for above tables:

1. Variation;
   - Adjustment value (ADJ.) : Date written during camera adjustment.
   - Fixed value (Fixed) : Data in which a fixed value is to be written.
   - Fixed and Adjustment (---) : Upper data and lower data are diffirent variation.
   - Ref1 USA version DATA 0
     Other version DATA 255

* Both upper and lower value are decimal number.

# Inspection standard for repair tools

〔1〕 Inspection standard for repair ---------- R 1

〔2〕 Tools ---------- T 1

---

## Conditions for inspection

| | |
|---|---|
| Normal remperature: | 25±5 ° C (Relative humidity: 65±20%) |
| Power source: | 3.0 ±0.03V, 2A or more at 0.5Ω load |
| Loght source: | Surface light source 2,854° K |
| K coefficient: | 1.3 |

## [1] Inspection standard

FCA22001-R. 3339. A

| | Item | Standard | Tools |
|---|---|---|---|
| Photo graph | Frame size | Shorter side:24 $^{+0.3mm}_{-0.3mm}$<br>Longer side: 36 $^{+0.3mm}_{-0.3mm}$<br>Shorter side of panorama frame:13.3 $^{+1.5mm}_{-0.3mm}$ | Slide calipers<br>Scale<br>Film |
| | Frame-to-frame space | 0.5 - 3.5mm | |
| | Frame position | ・Over 0.2mm between film perforation and frame.<br>・Inclination of frame is less than 0.15mm. | |
| | Light leakage | No light leakage is detected when 200,000 lux. min. (over 40,000 lux × hour) light is exposed from all directions. | Light leakage tester<br>Film (Tri-X) |
| AE accuracy | AE accuracy<br>Make inspections five times and the results should meet the following conditions.<br>ISO : 100 | | BP-511N DC regulated power supply (with 0.5 Ω) |

| Mode | Exposure value | | Allowance | Exposure variation | Difference of each EV |
|---|---|---|---|---|---|
| P | 2 ~11 EV | | ±0.8 EV | 0.6 EV | Not to be inverted |
| | 11~14 EV | | | 0.8 EV | |
| | 14~16 EV | | ±1.0 EV | 1.0 EV | |
| A | F2.8~F5.6 | | ±0.5 EV | 0.6 EV | Not to be inverted |
| | F6.7~F11 | Under 1/125 | ±0.8 EV | 0.7 EV | |
| | | Over 1/125 | | 0.6 EV | |
| | F13 ~F22 | Under 1/125 | | 0.7 EV | |
| | | Over 1/125 | ±1.0 EV | | |

Allowance in conversion is obtained by adding ±0.125 EV to the above values.

| | |
|---|---|
| Shutter operation in bright condition | shutter should operate at LV16 with ISO 1600 film speed setting. |
| Adjustment of tester | Settings: ISO 100, K=1.3, LV9<br>Set lens to Wide position, open shutter sector and then set camera to tester.<br>Under above condition, set tester's switch to "CAL" and adjust tester with variable resistor so that indication will be +2.0BV. |

| | Item | Standard | Tools |
|---|---|---|---|
| FM accuracy | Low brightness firing level | | BF-511N DC regulated power supply (AB tester) |

| Mode | Exposure value | Allowance | Exposure variation | Difference of each BV |
|---|---|---|---|---|
| P | F2.8 ~F22 | ±1.0 AV | Within 0.9AV | Not to be inverted |

| | |
|---|---|
| Low brightness firing level | ISO 100BV BV9 ±1BV<br>Check the level with flash ready-light in Viewfinder. |
| PTS determination accuracy | Make sure that PTS lamp lights up at BV 4.5V±1.0BV for all ISO film speed. |

| | | | |
|---|---|---|---|
| AF accuracy | AF distance pulse value and change-over point: Following values should be satisfied when camera and standard reflector are placed separating them by specified distance and checked by using personal computer. | | Standard reflector<br>Personal computer (PC-9800)<br>Measuring tape |

| Distance | Reference pulse | Allowance |
|---|---|---|
| 0. 4mm | 749. 4 | ±6. 0 |
| 0. 67mm | 511. 8 | ±6. 9 |
| 1. 0mm | 400. 6 | ±7. 3 |
| 1. 5mm | 327. 1 | ±7. 5 |
| 2. 0mm | 290. 9 | ±7. 7 |
| 3. 0mm | 255. 0 | ±7. 8 |
| 4. 0mm | 237. 1 | ±7. 9 |
| 4. 4mm | 232. 3 | ±7. 9 |
| 5. 0mm | 226. 5 | ±7. 9 |

| | |
|---|---|
| Distance-too-close warning | 40±2cm<br>Focus bracket indicator in viewfinder blinks. |

| | | | | | |
|---|---|---|---|---|---|
| Lens barrel Back focus | Lens barrel switching time and current | lens barrel position | Driving time | Driving current | Oscilloscope<br>DC regulated power supply (with 0.5 Ω)<br>Stopwatch |
| | | Lens retraction → Focusing standard | Within 1.5 sec. | Within 700 mA | |
| | | Lens retraction ← Focusing standard | | | |
| | Position of the tip of lens barrel | 10.7±2mm<br>Measure lens barrel retracted length at focusing standard position | | | |
| | Lens barrel stops abnormally | Under 2.0kg<br>No abnormality is found when lens barrel is stopped forcefully with hand while operating. | | | Collimator<br>PFD adjustment focus stand |
| | Back focus | 0 ±40μm<br>at infinity position on film guide | | | |

| | 項　目 | 判　定　基　準 | 摘　要 |
|---|---|---|---|
| Speed-light | Guide number | Guide number: 9.0 ±0.4EV<br>Central area light quantity at 3m distance when shutter is released immediately before flash fires.<br>(using a freash battery after the completion of film advance keeping charginh time off) | Flash meter<br>Lithium battery<br>Measuring tape<br>Reference reflector<br>Stopwatch |
| | Recycling time | 6 seconds or shorter after firing using a freash battery until the first 4 exposures. | |
| | Light distribution feature | Measure light at following point.<br>Diifference from center should be within -1.0EV.<br>Top: 20°, Bottom: 23°, Right: 31°, Left: 28°<br>Unusual unevenness not found. | |
| | Color temperature | 5,800 ±300 ° K | Color temperature meter |
| Viewfinder | Diopter | -1±1 dpt | Diopter telescope<br>Viewfild chart<br>Film scale |
| | Viewfinder coverage | Regular size: 85±5%<br>Panorama size: 73-95%<br>in all detections | |
| | Parallax | Image in the viewfinder does not protrude over the actual image at 3m distance. | |
| | Magnification | 0.5 ±0.05 | |
| Current consumption | Self-timer | 10±3 seconds | Oscilloscope<br>Stopwatch<br>DC regulated power supply (with 0.5 Ω)<br>Film |
| | Battery check voltage | Warning level: 2.30 ±0.05V<br>Shutter release lock: 2.15±0.05V | |
| | Standby current | 20μA or less when main switch is OFF. | |
| | shutter pre-release current | 35mA or less | |
| | In film advance/ rewind operation | Film advance: 700mA or less<br>Film rewind: 600mA or less | |
| | PTS lamp | Current consumption: 800mA or less | |
| | Clearance on external surface | 0.2mm or less | |

## [2] TOOLs

1. Major measuring instruments

| Tool No. | Name | Model |
|---|---|---|
| Non | Oscilloscope | Yokogawa DL-1200 |
| Non | Slide calipers | |
| J15134 | Torque driver | |
| J9001-5 | DC regulated power supply | Metronics 526, 0-18V, 2A |
| J9006-6 | Digital multimeter | Hioki 3200 |
| J18190 | Reference reflector | Oxford Gray No. 22 30x50cm |
| J19019 | Collimator | Goko 24LT-2DTS<br>f=193.5mm |
| J19036 | Multi shutter tester | BF-511N OR BF-8000 |
| J15291 | F. F. D. adjustment focus stand | |
| J15134 | Adjustment tool | |
| J18236 | Adjustment FD | |
| J18006 | Parallax adjustment board | |
| J18033 | Focus glass for parallax adjustment | |
| | | |

| 作成承認印 | 配布許可印 |
| --- | --- |
| ニコンカメラサービス部 GM | |

# Nikon 35Ti FCA 22001

QUARTZ DATE

## PARTS LIST (REVISED-1)

## 修 理 部 品 表（改訂－１）

Nikon | NIKON CORPORATION
Tokyo, Japan

© Copyright 1993
ALL RIGHTS RESERVED
無断転載を禁ず！！

Feb. 10, 1994

Printed in Japan February

## 記号説明　MARKS IN THE PARTS LIST

(1) 機械標準品

下の表に示す機械標準品の部品番号は品名、種類、呼び径、長さを示しています。

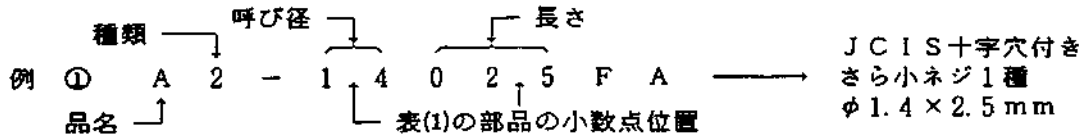


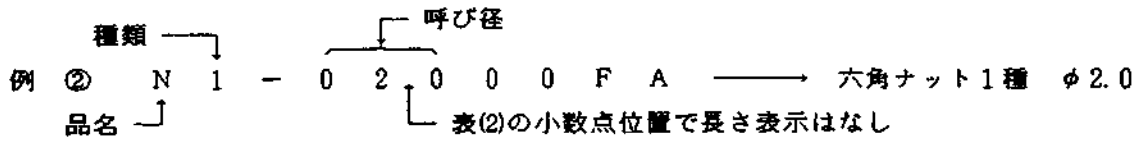


(1) Standard mechanical parts
Reference Number in the Parts List

A. Screw ・Pin

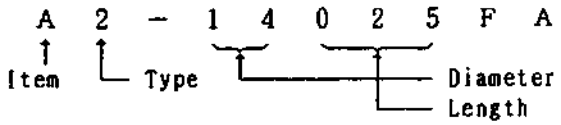


B. Nut ・Washer・Snap ring

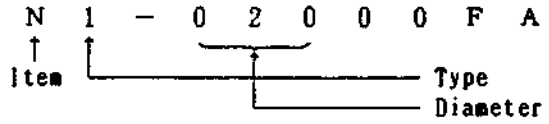


表 1

| 品名 Item | | 種類 Type | |
|---|---|---|---|
| JCIS 十字穴付き小ねじ1種 Cross-point screw 1 | A | なべ Pan | 1 |
| | | さら Countersunk | 2 |
| | | 丸さら Oval | 3 |
| JCIS 十字穴付き小ねじ3種 Cross-point screw 3 | B | なべ Pan | 1 |
| | | さら Countersunk | 2 |
| | | 丸さら Oval | 3 |
| 十字穴付き小ねじ Cross-point screw | C | なべ Pan | 1 |
| | | さら Countersunk | 2 |
| | | 丸さら Oval | 3 |
| | | トラス Trus | 4 |
| 十字穴付きタップタイタイトねじB型 Cross-point tapped screw B | F | なべ Pan | 1 |
| | | さら Countersunk | 2 |
| 十字穴付きタップタイタイトねじB型1種 Cross-point tapped screw B1 | G | なべ Pan | 1 |
| | | さら Countersunk | 2 |
| | | 丸さら Oval | 3 |
| 十字穴付きタップタイタイトねじB型3種 Cross-point tapped screw B3 | H | なべ Pan | 1 |
| | | さら Countersunk | 2 |
| | | 丸さら Oval | 3 |

| 品名 Item | | 種類 Type | |
|---|---|---|---|
| すりわり付き止めねじ Splitted set screw | K | 丸先 Round point | 1 |
| | | とがり先 Cone point | 2 |
| | | くぼみ先 Half point | 3 |
| 六角穴付き止めねじ Hexagon socket head set screw | L | とがり先 Cone point | 2 |
| | | くぼみ先 Half point | 3 |
| | | 平先 Normal | 4 |
| 六角穴付きボルト Hexagon socket head bolt | M | | 1 |
| | | M2, M2.6 | 2 |
| 平行ピン Straight pin | P | | 1 |
| | | ステンレス Stainless steel | 5 |
| テーパーピン Taper pin | | | 2 |
| スプリングピン Spring cotter | | 一般用 Normal | 3 |
| | | 軽荷重用 Light | 4 |

表 2

| 品名 Item | | 種類 Type | |
|---|---|---|---|
| 六角ナット Hexagon nut | K | 1種 Type 1 | 1 |
| | | 1種 Type 3 | 3 |
| 平座金 Washer | R | 小形丸 | 1 |
| | | みがき丸 | 2 |
| ばね座金 Spring washer | | | 5 |
| E型止め環 E-snap ring | S | E型 Type E | 1 |
| | | G型 Type G | 2 |
| | | GS型 Type GS | 3 |

(2) 販売区分欄 The term of sale colum

| 記 号 Mark | 説 明 Explanation | |
|---|---|---|
| ○ | Can be Supplied individually | 単独部品として販売するもの |
| △ | Not supplied individually but only as subassembly. | 部組品でなければ販売しないもの |
| ○△ | Supplied either as part or subassembly | 単独部品でも部組品でも販売するもの |
| × | Not considered as repair part | 修理部品と考えないもの |
| ※ | Should be sent to the factory if the repair needed. | 単体では交換できないので、組む場合に工場での加工が必要なもの |
| ⊠ | Delivered as a product from the sales department (i.e., not supplied as repair part) | 商品として販売店で販売しているもの（修理部品扱いはしない） |

(3) 備考欄 The remarks colum

| | | |
|---|---|---|
| F-601M | Part number used in common | 共通部品番号 |
| (Blue ×125mm) | Lead wire (color × length) | コードの色と長さ |
| 53F-2013 (FM-780028) | Technical information ref. number (number in parenthesis; English edition) | 製品技術資料No. ( )内は英文 |
| (2.1×3.8 ×0.07) | Washer (internal diameter × external diameter×thickness) | ワッシャー（内径×外径×厚さ） |
| (Black) | Black-finished parts | 黒部品 |
| (d=0.2) | Diameter of wire | 線型＝0.2 |
| (t= 1) | Thickness | 厚さ＝1 |
| Rev. | Revision | 訂正 |
| Add. | Addition | 追加 |
| Dis. | Discontinuation | 廃止 |
| OLD | Parts of the intial design | 旧部品 |
| ◆ | Limited part | ＲＰ限定出庫部品 |
| RP-9001 | Repair part information No. | ＲＰ情報Ｎｏ. |
| R1... D1.... W1... C1... Q1.... P1... | Abbreviation for electronic part | 電気部品記号 |
| TA-0003 | Number (TA-****) are order numbers of adhesive tape. (For the order of adhesive tape, the number 1K***-*** is not use). | 接着テープ要求部番（1K***-*** では部品要求できません。） |
| W-0056BE | Number (W-0056BE) are order numbers of Lead wire. (For the order of Lead wire, the number 1K***-*** is not use). | リードワイア要求部番（1S***-*** では部品要求できません。） |

＊ VERSATILE PART

＊ 既出部品

Apart maked with this pentagonal symblo is used commonly in the arcitecture of other products. That is called "VERSATILE PART". Note that every part, bearing new part number of eleven places, will turn into a VERSATILE PART when it is used in the design of future product.

# テープ類ＴＡ設定部品一覧表

## TAPES AND FILMS WITH PREFIX ALPHABETS TA

Dec. 17, 1991

| 部品No.<br>Part No. | 名称<br>Name of part | 色<br>Color | 厚さ<br>Thickness (t=mm) | 幅<br>Widhs (mm) | 長さ<br>Length (m) | 要求単位<br>Q'ty for a unit for ordering |
|---|---|---|---|---|---|---|
| TA－0001 | ポリエステルフィルム<br>Tape | 透明<br>Transparent | 0.025 | 10 | 30 | 1巻<br>1 roll |
| TA－0002 | ポリエステルフィルム<br>Tape | 透明<br>Transparent | 0.025 | 20 | 30 | 1巻<br>1 roll |
| TA－0003 | 両面接着テープ<br>Both sided adhesive tape | 白<br>White | 0.16 | 10 | 2 | 1巻<br>1 roll |
| TA－0004 | 両面接着テープ<br>Both sided adhesive tape | 黒<br>Black | 0.14 | 12 | 50 | 1巻<br>1 roll |
| TA－0005 | ポリエステルフィルム<br>Tape | 黄<br>Yellow | 0.06 | 19 | 66 | 1巻<br>1 roll |
| TA－0006S | アセテートクロス（シート）<br>Tape (200x120/sheet) | 黒<br>Black | 0.23 | 6 | 200<br>(mm) | 1set<br>(20pcs) |
| TA－0007 | 銅泊導電性<br>Tape. copper foil | 銅泊<br>Copper foil | 0.11 | 4 | 6 | 1巻<br>1 roll |
| TA－0008 | ポリエステルフィルム<br>Tape | 透明<br>Transparent | 0.055 | 30 | 30 | 1巻<br>1 roll |
| TA－0009 | カプトンフィルム<br>Tape | 琥珀<br>Amber | 0.07 | 6 | 30 | 1巻<br>1 roll |
| TA－0010 | 両面接着テープ<br>Both sided adhesive tape | 乳白色<br>Opal | 0.16 | 15 | 36 | 1巻<br>1 roll |
| TA－0011 | ポリエステルフィルム<br>Tape | 黒<br>Black | 0.06 | 10 | 30 | 1巻<br>1 roll |
| TA－0012 | ポリエステルフィルム<br>Tape | 透明<br>Transparent | 0.025 | 6 | 30 | 1巻<br>1 roll |
| TA－0013 | アセテートクロス（シート）<br>Tape (200x120/sheet) | 黒<br>Black | 0.23 | 20 | 200<br>(mm) | 1set<br>(20pcs) |
| | | | | | | |
| | | | | | | |
| | | | | | | |
| | | | | | | |

# リードワイヤー一覧表

## LEAD WIRE LIST

DEC. 17. 1991

| 部品No. Part No. | 色 Color | 外形 Diameter (outer tube) | 導体サイズ Pcs. / Diameter (lead wire) |
|---|---|---|---|
| W−0045BN | Brown | 0.45mm | 7×0.05mm |
| W−0045RE | Red | -ditto- | -ditto- |
| W−0045OR | Orange | -ditto- | -ditto- |
| W−0045GN | Green | -ditto- | -ditto- |
| W−0045BE | Blue | -ditto- | -ditto- |
| W−0045PU | Purple | -ditto- | -ditto- |
| | | | |
| W−0056BK | Black | 0.56mm | 7×0.08mm |
| W−0056BN | Brown | -ditto- | -ditto- |
| W−0056RE | Red | -ditto- | -ditto- |
| W−0056OR | Orange | -ditto- | -ditto- |
| W−0056YE | Yellow | -ditto- | -ditto- |
| W−0056GN | Green | -ditto- | -ditto- |
| W−0056BE | Blue | -ditto- | -ditto- |
| W−0056PU | Purple | -ditto- | -ditto- |
| W−0056GY | Gray | -ditto- | -ditto- |
| W−0056WH | White | -ditto- | -ditto- |
| W−0056PK | Pink | -ditto- | -ditto- |
| | | | |
| | | | |
| | | | |
| W−0080BK | Black | 0.80mm | 7×0.12mm |
| W−0080BN | Brown | -ditto- | -ditto- |
| W−0080RE | Red | -ditto- | -ditto- |
| W−0080OR | Orange | -ditto- | -ditto- |
| W−0080YE | Yellow | -ditto- | -ditto- |
| W−0080GN | Green | -ditto- | -ditto- |
| W−0080BE | Blue | -ditto- | -ditto- |
| W−0080PU | Purple | -ditto- | -ditto- |
| W−0080GY | Gray | -ditto- | -ditto- |
| W−0080WH | White | -ditto- | -ditto- |
| W−0080LB | Light blue | -ditto- | -ditto- |
| | | | |
| | | | |
| | | | |
| 1 roll=20m | | | |

| 部品No. Part No. | 色 Color | 外形 Diameter (outer tube) | 導体サイズ Pcs. / Diameter (lead wire) |
|---|---|---|---|
| W−0108BK | Black | 1.08mm | 7×0.16mm |
| W−0108BN | Brown | -ditto- | -ditto- |
| W−0108RE | Red | -ditto- | -ditto- |
| W−0108OR | Orange | -ditto- | -ditto- |
| W−0108YE | Yellow | -ditto- | -ditto- |
| W−0108GN | Green | -ditto- | -ditto- |
| W−0108BE | Blue | -ditto- | -ditto- |
| W−0108PU | Purple | -ditto- | -ditto- |
| W−0108GY | Gray | -ditto- | -ditto- |
| W−0108WH | White | -ditto- | -ditto- |
| | | | |
| W−0120BK | Black | 1.2 mm | 7×0.18mm |
| W−0120BN | Brown | -ditto- | -ditto- |
| W−0120RE | Red | -ditto- | -ditto- |
| W−0120OR | Orange | -ditto- | -ditto- |
| W−0120YE | Yellow | -ditto- | -ditto- |
| W−0120GN | Green | -ditto- | -ditto- |
| W−0120BE | Blue | -ditto- | -ditto- |
| W−0120PU | Purple | -ditto- | -ditto- |
| W−0120GY | Gray | -ditto- | -ditto- |
| W−0120WH | White | -ditto- | -ditto- |
| | | | |
| W−0150BK | Black | 1.5 mm | 40×0.08mm |
| W−0150BN | Brown | -ditto- | -ditto- |
| W−0150RE | Red | -ditto- | -ditto- |
| W−0150OR | Orange | -ditto- | -ditto- |
| W−0150YE | Yellow | -ditto- | -ditto- |
| W−0150GN | Green | -ditto- | -ditto- |
| W−0150BE | Blue | -ditto- | -ditto- |
| W−0150PU | Purple | -ditto- | -ditto- |
| W−0150GY | Gray | -ditto- | -ditto- |
| W−0150WH | White | -ditto- | -ditto- |
| | | | |
| | | | |
| | | | |
| | | | |

# 収縮チューブ一覧表

## Thermal construction tube list

Dec. 17, 1991

| 部品 No.<br>Part No. | 名称<br>Name of part | 直径<br>Diameter<br>(φ) | 長さ<br>Length<br>(m) | 備考<br>Remaks |
|---|---|---|---|---|
| TU－0001 | 収縮チューブ<br>Thermal construction tube | 1.0mm | 1 | RP-8925 |
| TU－0002 | 収縮チューブ<br>Thermal construction tube | 2.0mm | 1 | RP-8925 |
| TU－0003 | 収縮チューブ<br>Thermal construction tube | 3.0mm | 1 | RP-8925 |
| TU－0004 | 収縮チューブ<br>Thermal construction tube | 4.0mm | 1 | RP-8925 |
| | | | | |
| | | | | |
| | | | | |
| | | | | |
| | | | | |
| | | | | |
| | | | | |
| | | | | |
| | | | | |
| | | | | |
| | | | | |
| | | | | |
| | | | | |

# 展開図の見方　How to use explosion drawings

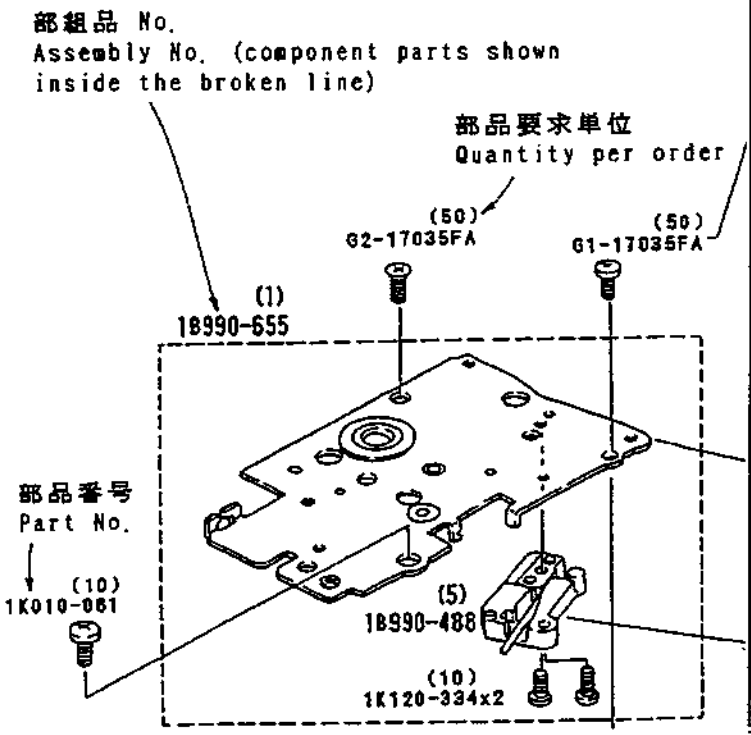


| 項　目<br>Part Classification | 販売区分<br>Term of Supply | 記号<br>Mark |
|---|---|---|
| 破線外で部番の入っているもの<br>Part with Part No., shown outside the broken line | 単部品で要求できるもの<br>Avilable as individual part | ○ |
| 破線外で部番のないもの<br>Part without Part No., shown outside the broken line | 修理部品と考えないもの<br>Not available as repair part | × |
| 破線内で部番のないもの<br>Part without Part No., shown inside the broken line. | 部組品でなければで要求できないもの<br>Avilable only as assembly. | △ |
| 破線内で部番の入っているもの<br>Part with Part No., shown inside the broken line | 単部品でも部組品でも要求できるもの<br>Avilable as assembly or individually | ○△ |

# 展開図中の部品位置を確認する手順
# HOW TO FIND THE PART WITH PART NUMBER IN THE DRAWING

部品表 Parts List

| 部品番号 Part No. | 補助番号 Ckt No. | 名称 Name | 1台分個数 Q'ty Per Unit | 部組品番号 Assembly | 参照図番 Fig. No. | 販売区分 Class. of Salability | 備考 Remarks | 要求単位 Order Unit Q'ty |
|---|---|---|---|---|---|---|---|---|
| *1K240-516 | 573 | シュー座板バネ Accessory shoe spring | 1 | 1B990-712-2 | 9 A1 | ○△ | F-401S F-601 | 5 |
| *1K240-713-1 | 527 | ロックバネB Lock spring B | 1 | 1B990-712-2 | 10 A2 | ○△ | | 5 |

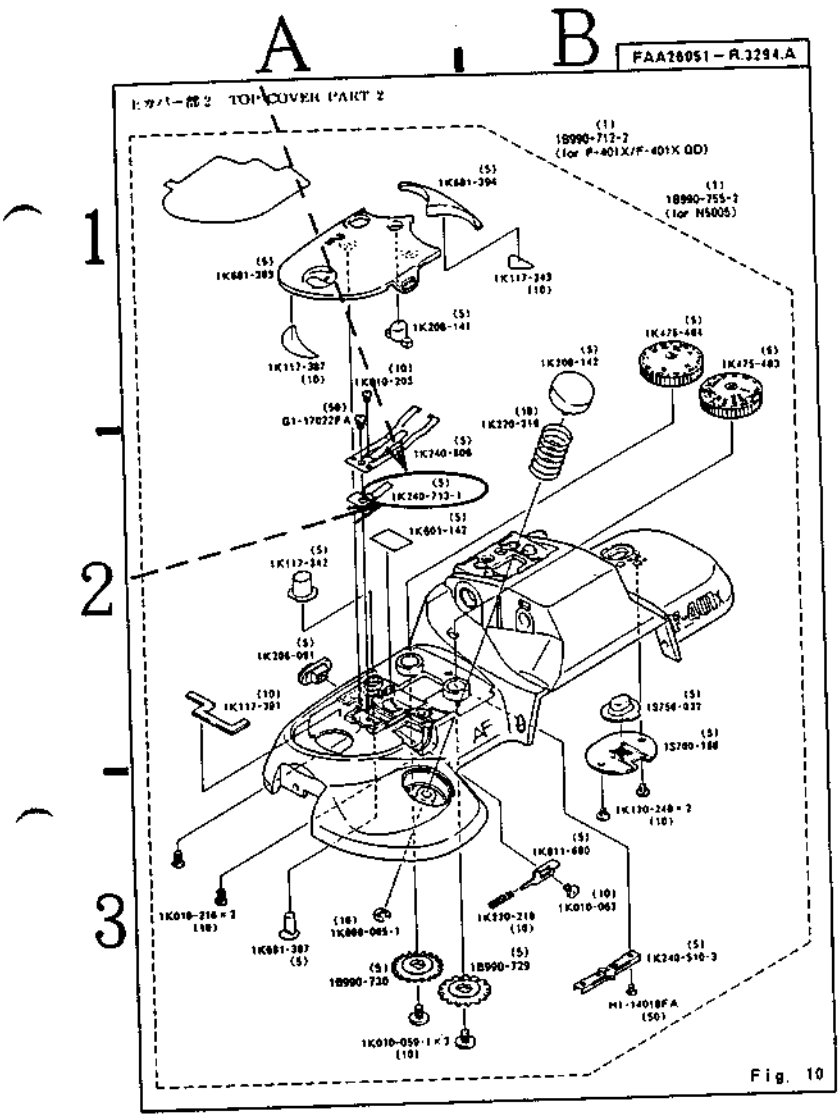


① 部品表の参照図番欄のコードを見る。

Please refer to the letters written in the Fig. No. Column.

② 9，10等の数字は図面番号を示す。

The numbers 9 and 10 mean the Fig. number.

③ A1，A2等のアルファベットと数字の組み合わせは、図面中の部品の位置を示す。

例 A，B．．　は横方向の位置を示す。
　 1，2．．　は縦方向の位置を示す。

※ よって(1K240-713-1) はAと2が示す範囲内にある。

The combinations of alphabets and numbers, A1 and A2, point out the place of relevant parts in the drawing.

Example)

Alphabets like A and B point out the places along the holizontal direction.

Numbers like 1 and 2 point out the places along the vertical direction.

※It means that the part No. (1K240-713-1) is existing in the area where A and 2 are crossing.

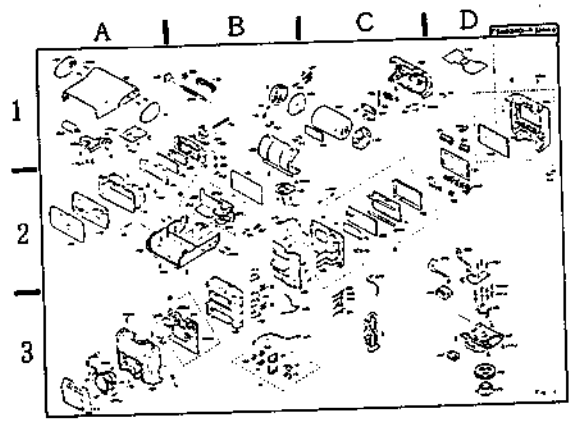


④ 例外 -- ビス，ワッシャー等 は Fig No. のみ記載する。

As for screws and washers and the like, no code number showing existing place is discribed in the Fig. No. Column, but only the relevant drawing number (Fig. No.) is stated.

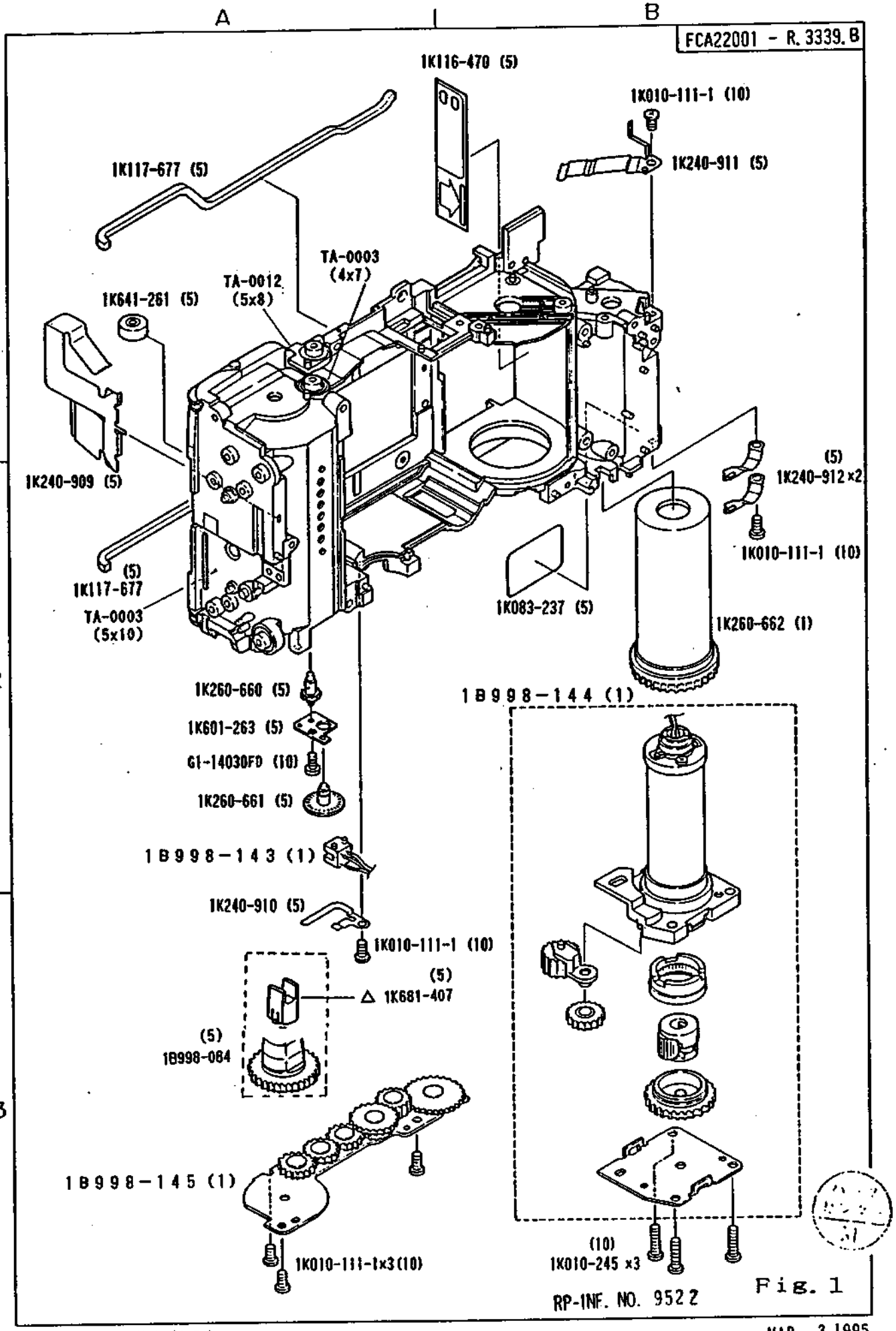


RP-INF. NO. 9522

Fig. 1

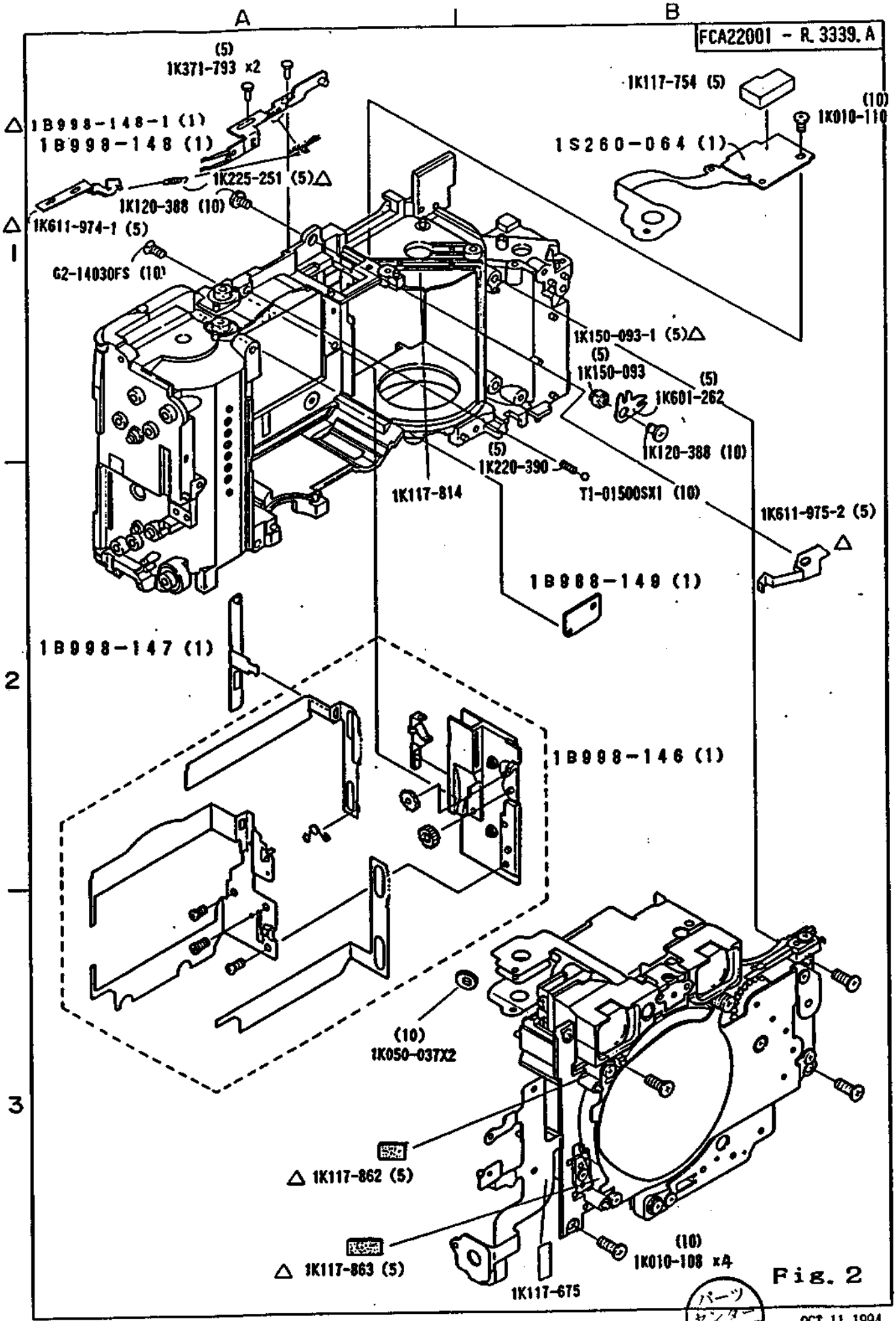


Fig. 2



パーツセンター M

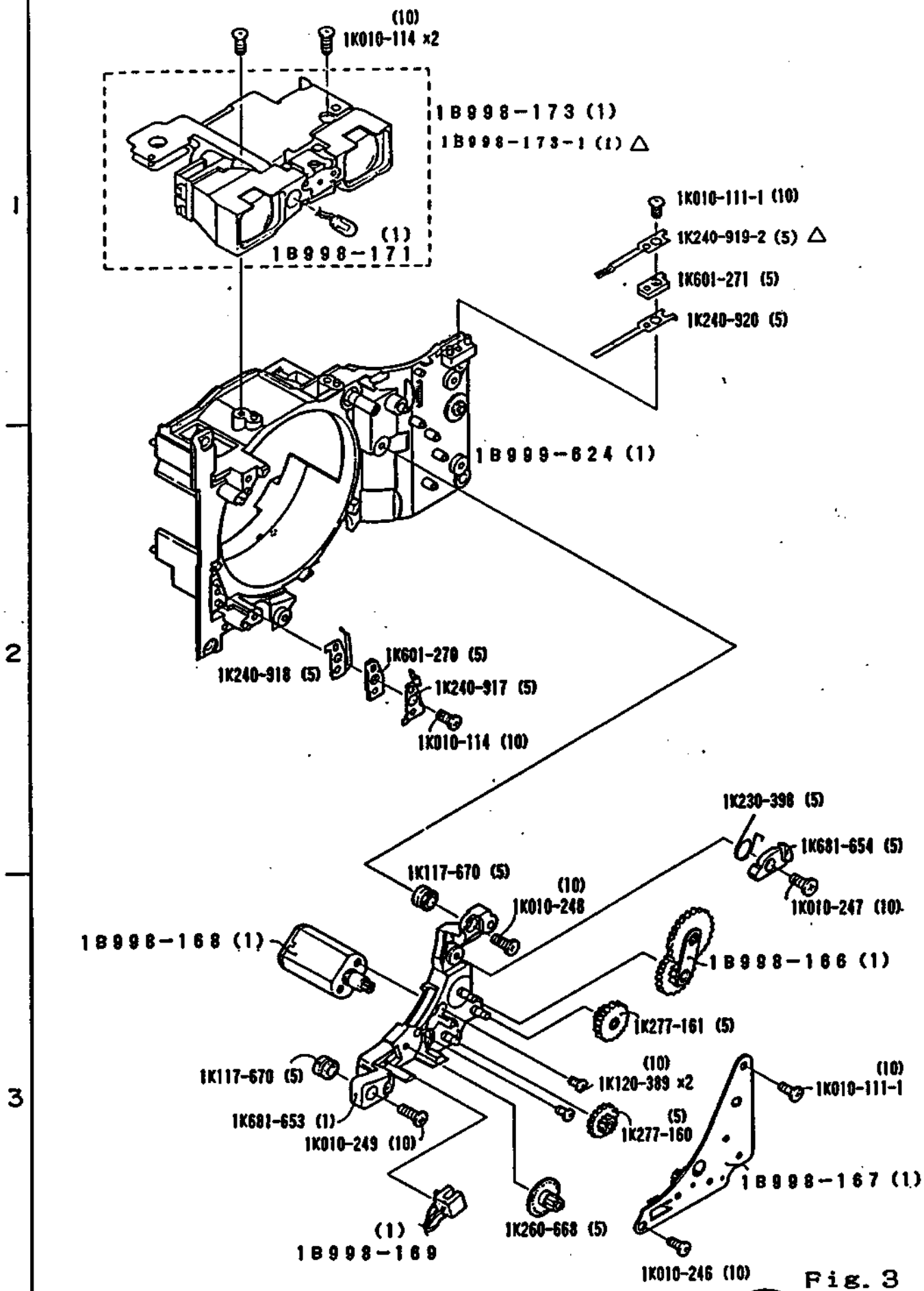
A
B
1
2
3
(10)
1K010-114 ×2
1B998-173 (1)
1B998-173-1 (1) △
(1)
1B998-171
1K010-111-1 (10)
1K240-919-2 (5) △
1K601-271 (5)
1K240-920 (5)
1B999-624 (1)
1K601-270 (5)
1K240-918 (5)
1K240-917 (5)
1K010-114 (10)
1K230-398 (5)
1K681-654 (5)
1K010-247 (10)
1K117-670 (5)
(10)
1K010-248
1B998-168 (1)
1B998-166 (1)
1K277-161 (5)
1K117-670 (5)
(10)
1K120-389 ×2
(10)
1K010-111-1
1K681-653 (1)
1K010-249 (10)
(5)
1K277-160
1B998-167 (1)
(1)
1B998-169
1K260-668 (5)
1K010-246 (10)

Fig. 3

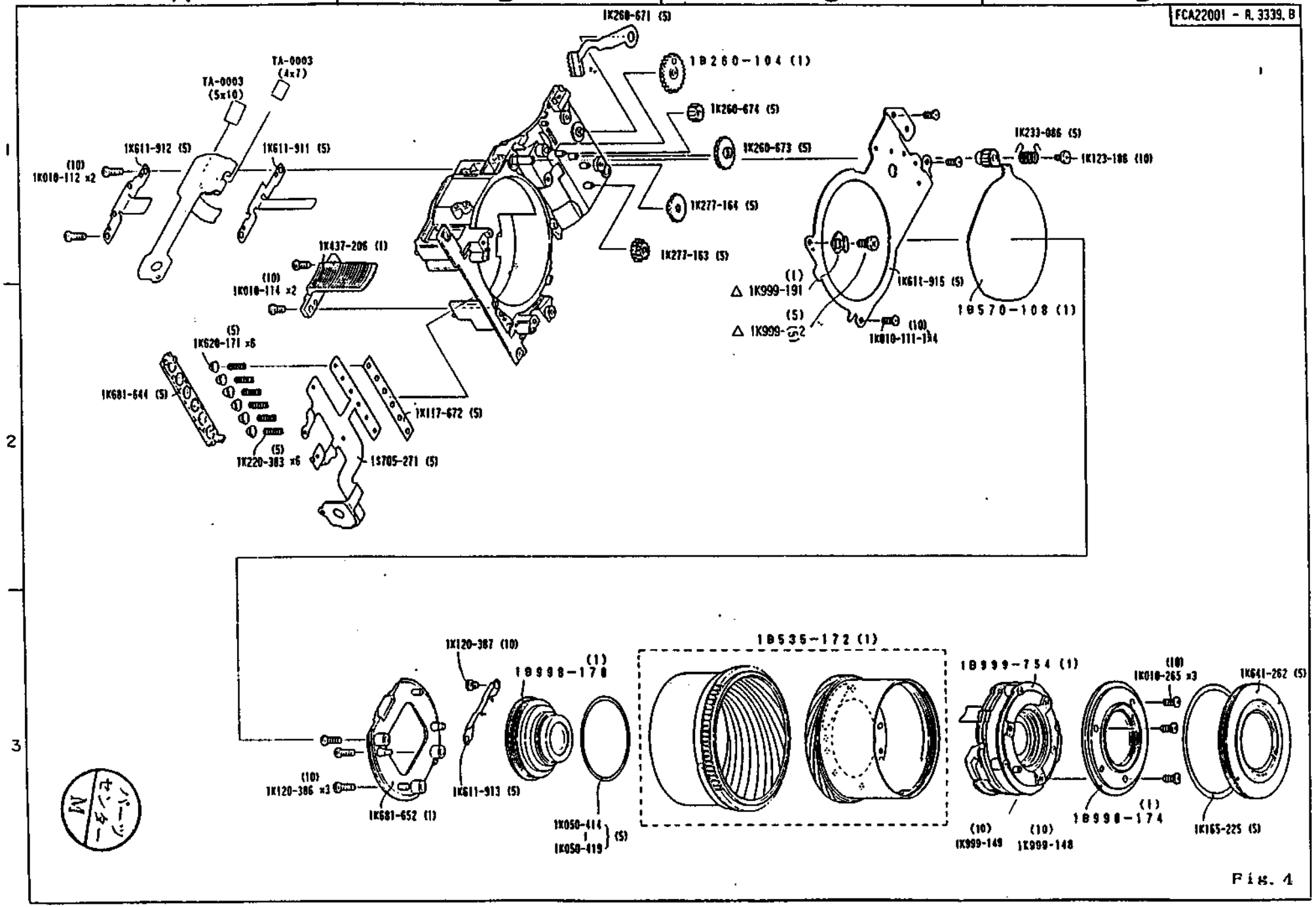
FCA22001 - R. 3339. B
A
B
C
D
1
2
3
1K260-671 (5)
1B260-104 (1)
1K260-674 (5)
1K260-673 (5)
1K277-164 (5)
1K277-163 (5)
TA-0003 (4x7)
TA-0003 (5x10)
1K611-912 (5)
1K611-911 (5)
(10) 1K010-112 x2
1K437-206 (1)
(10) 1K010-114 x2
(5) 1K620-171 x6
1K681-644 (5)
1K117-672 (5)
(5) 1K220-383 x6
1S705-271 (5)
1K233-086 (5)
1K123-186 (10)
(1) △ 1K999-191
(5) △ 1K999-152
1K611-915 (5)
(10) 1K010-111-1x4
1B570-108 (1)
1K120-387 (10)
(1) 1B998-170
1B535-172 (1)
1B999-754 (1)
(10) 1K010-265 x3
1K641-262 (5)
(10) 1K120-386 x3
1K681-652 (1)
1K611-913 (5)
1K050-414 / 1K050-419 (5)
(10) 1K999-149
(10) 1K999-148
(1) 1B998-174
1K165-225 (5)
パーツセンター
M

Fig. 4

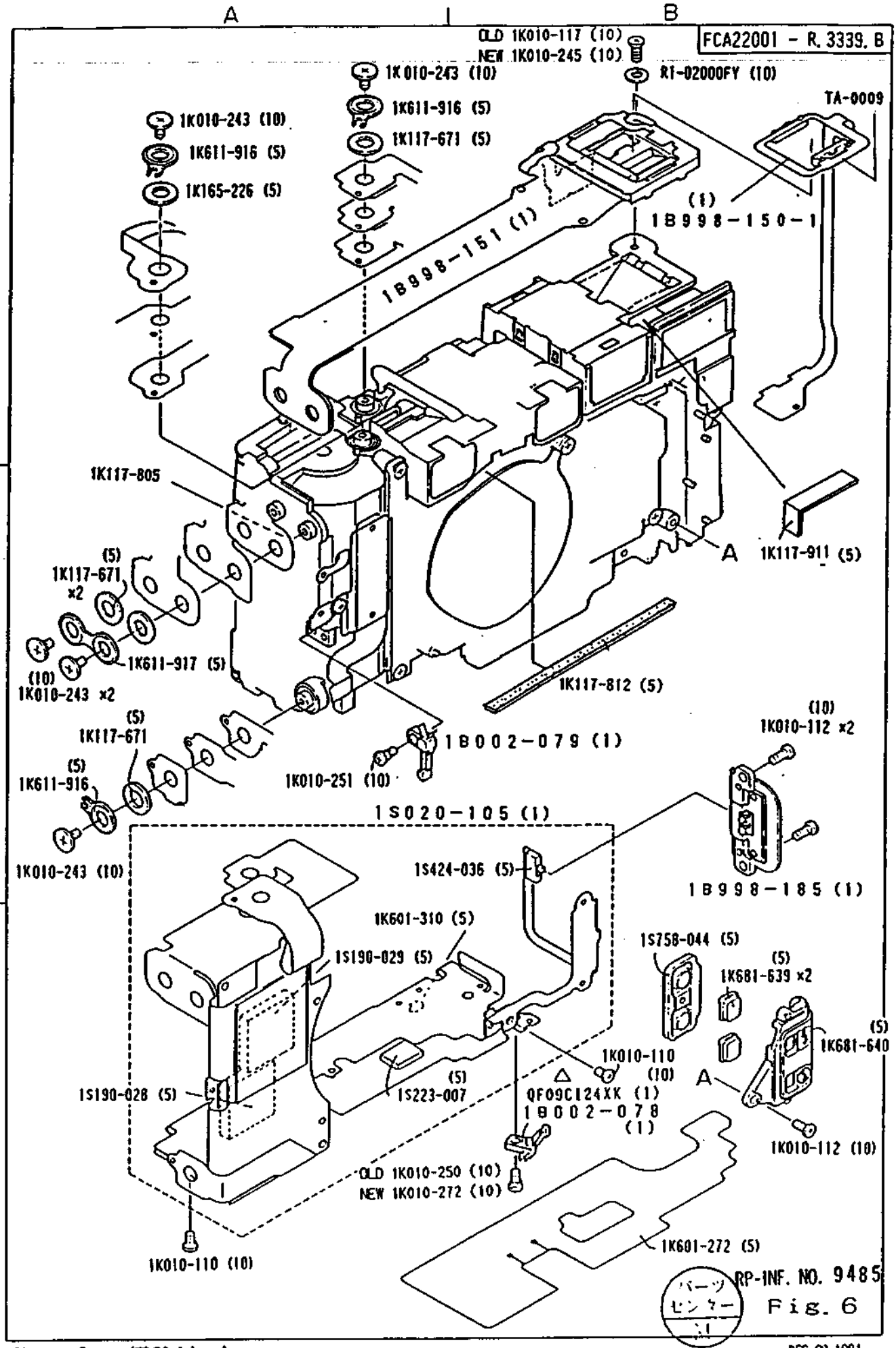


Change Page (差替え) △×1



DEC. 22. 1994

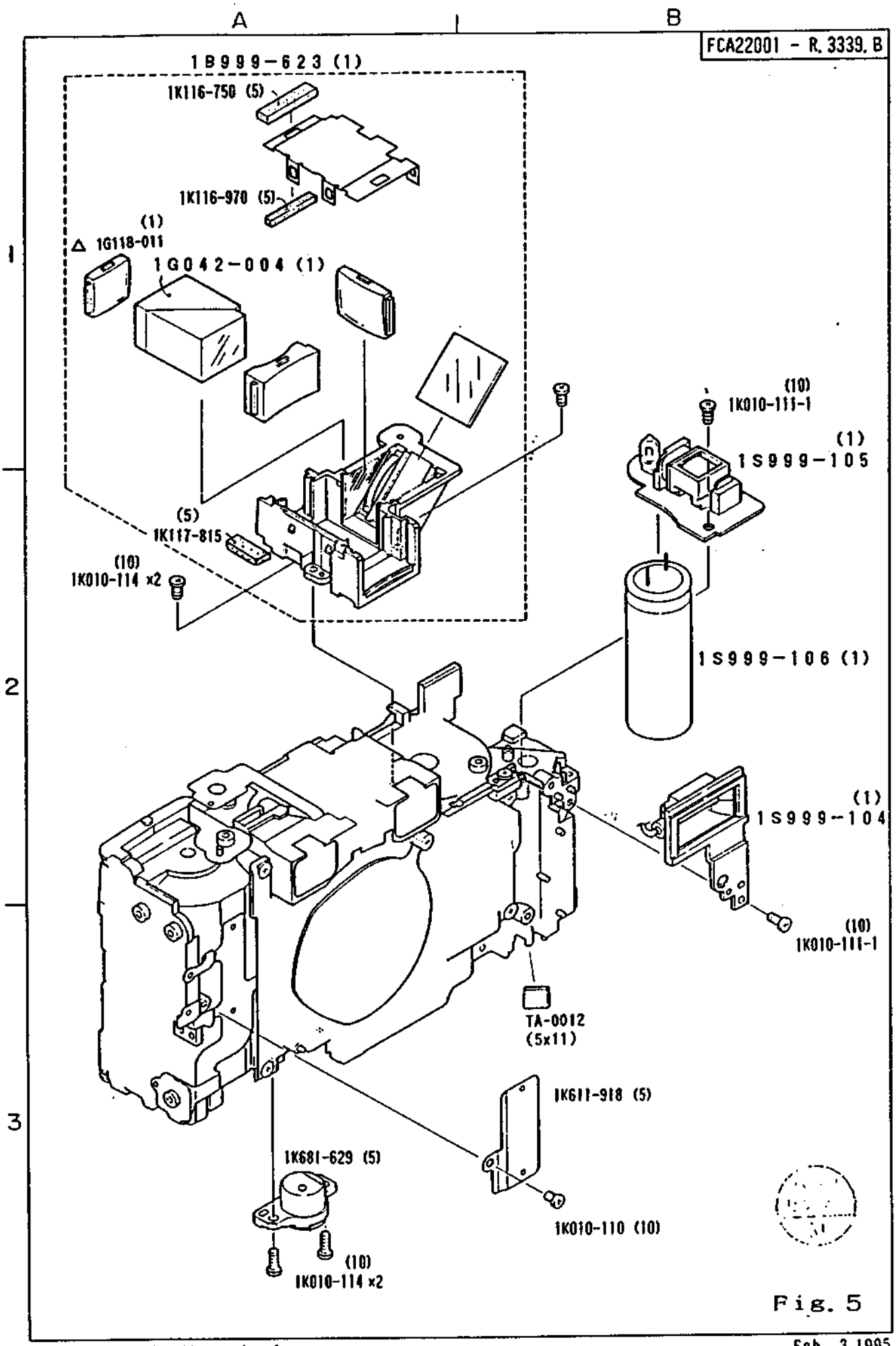
A
B
FCA22001 - R.3339.B
1B999-623 (1)
1K116-750 (5)
1K116-970 (5)
(1)
△ 1G118-011
1G042-004 (1)
(5)
1K117-815
(10)
1K010-114 ×2
(10)
1K010-111-1
(1)
1S999-105
1S999-106 (1)
(1)
1S999-104
(10)
1K010-111-1
TA-0012
(5x11)
1K611-918 (5)
1K681-629 (5)
1K010-110 (10)
(10)
1K010-114 ×2
1
2
3

Fig. 5

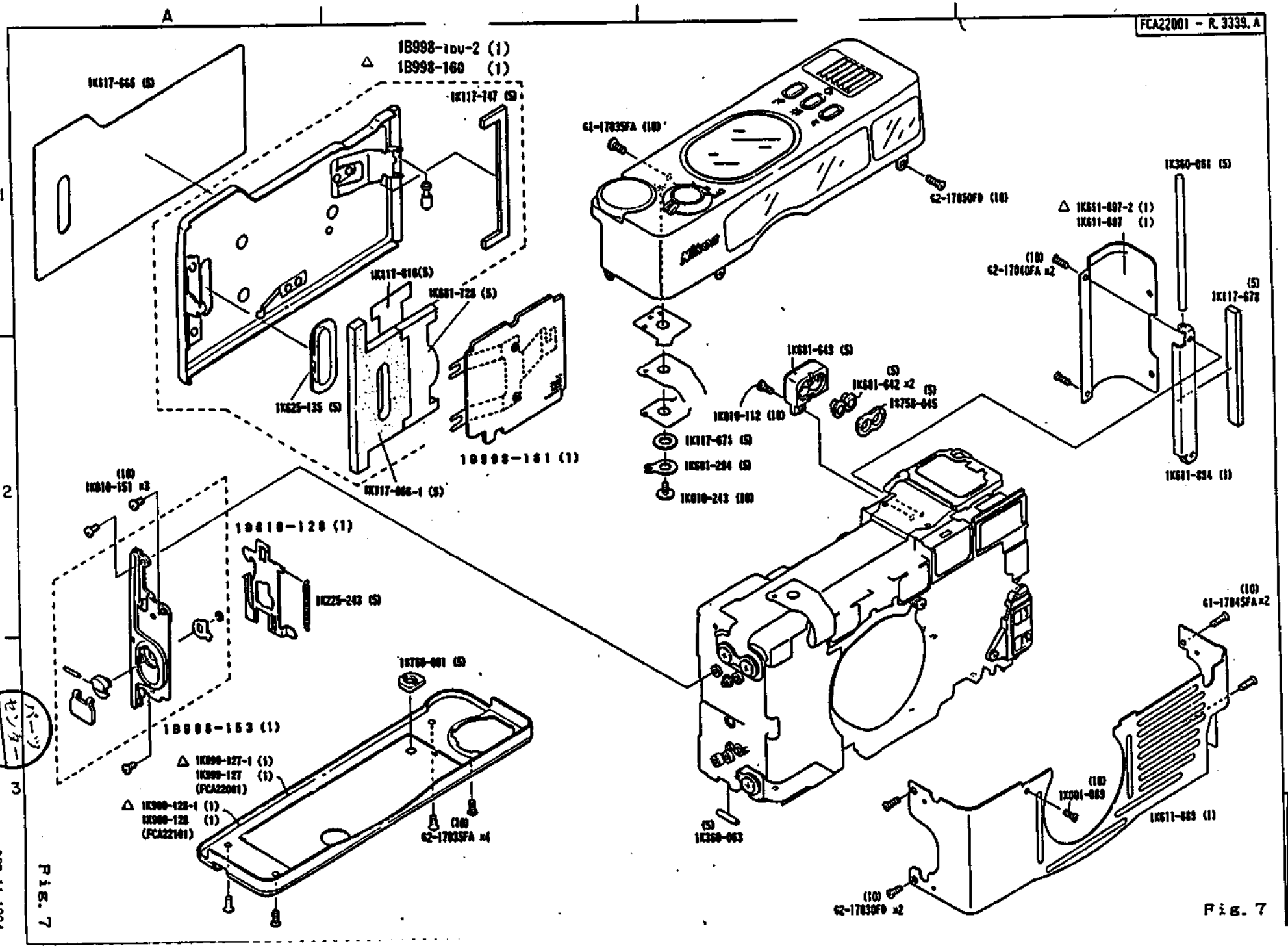
1B998-160 (1)
1K117-665 (5)
1K117-747 (5)
1K117-816(5)
1K681-728 (5)
1K625-135 (5)
1B998-161 (1)
1K117-668-1 (5)
61-17035FA (10)
62-17050FD (10)
1K360-061 (5)
1K611-897-2 (1)
1K611-897 (1)
62-17040FA x2
1K117-678
1K681-643 (5)
1K681-642 x2
1S750-045
1K010-112 (10)
1K117-671 (5)
1K681-294 (5)
1K010-243 (10)
1K611-894 (1)
1K010-151 x3
1B998-128 (1)
1K225-243 (5)
1S700-001 (5)
1B998-153 (1)
1K990-127-1 (1)
1K990-127 (1)
(FCA22001)
1K990-128-1 (1)
1K990-128 (1)
(FCA22101)
62-17035FA x4
1K360-063
61-17045FA x2
1K001-089
1K611-885 (1)
62-17030FD x2
パーツセンター M

Fig. 7

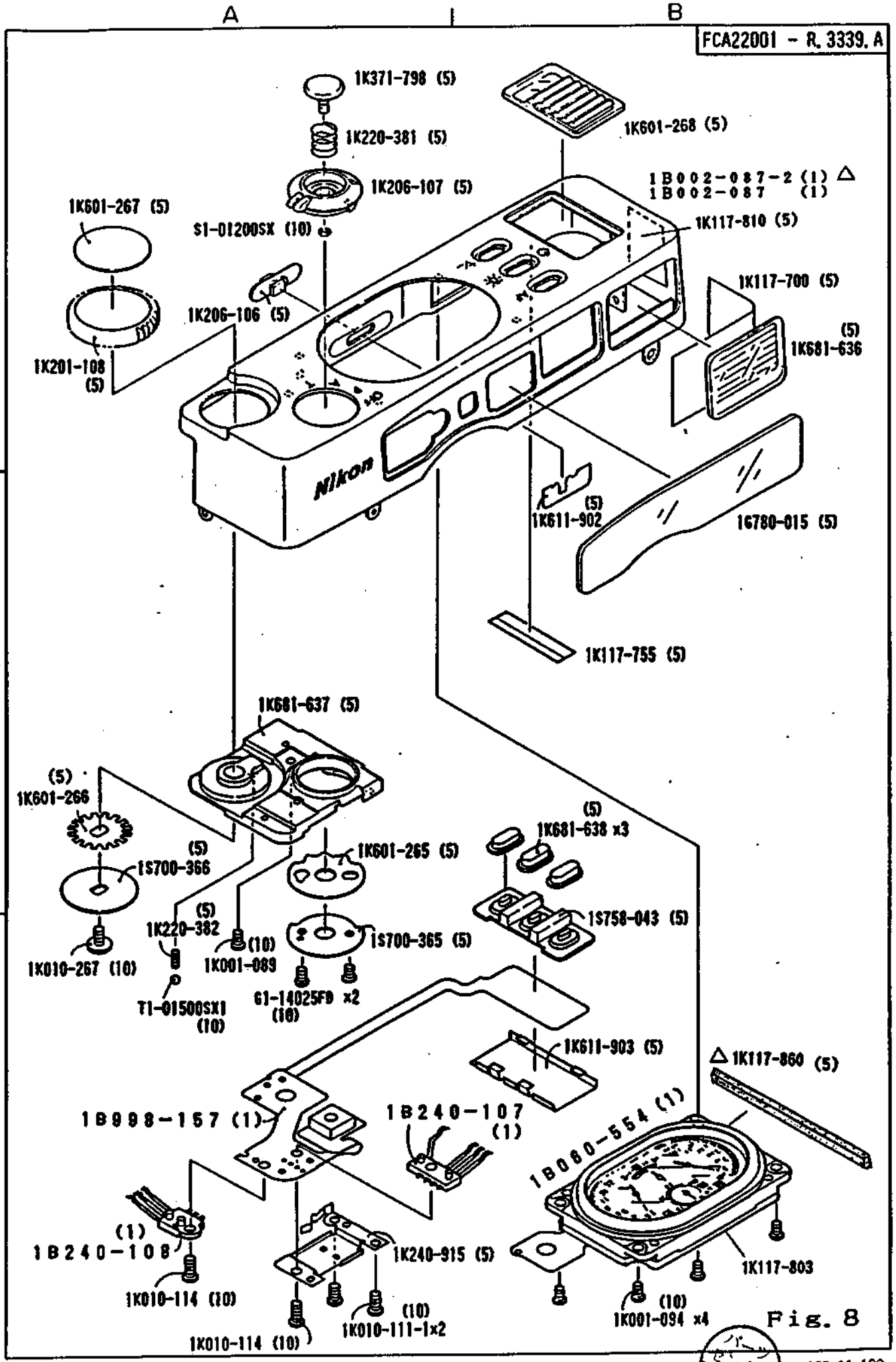
A
B
1
2
3
1K371-798 (5)
1K220-381 (5)
1K206-107 (5)
1K601-268 (5)
1B002-087-2 (1) △
1B002-087 (1)
1K601-267 (5)
S1-01200SX (10)
1K117-810 (5)
1K117-700 (5)
1K206-106 (5)
(5)
1K681-636
1K201-108
(5)
Nikon
(5)
1K611-902
1G780-015 (5)
1K117-755 (5)
1K681-637 (5)
(5)
1K601-266
(5)
1K681-638 x3
(5)
1S700-366
1K601-265 (5)
(5)
1K220-382
1S758-043 (5)
(10)
1K001-089
1S700-365 (5)
1K010-267 (10)
G1-14025F9 x2
(10)
T1-01500SX1
(10)
1K611-903 (5)
△1K117-860 (5)
1B998-157 (1)
1B240-107
(1)
1B080-554 (1)
(1)
1B240-108
1K240-915 (5)
1K117-803
1K010-114 (10)
(10)
1K001-094 x4
(10)
1K010-111-1x2
1K010-114 (10)

Fig. 8

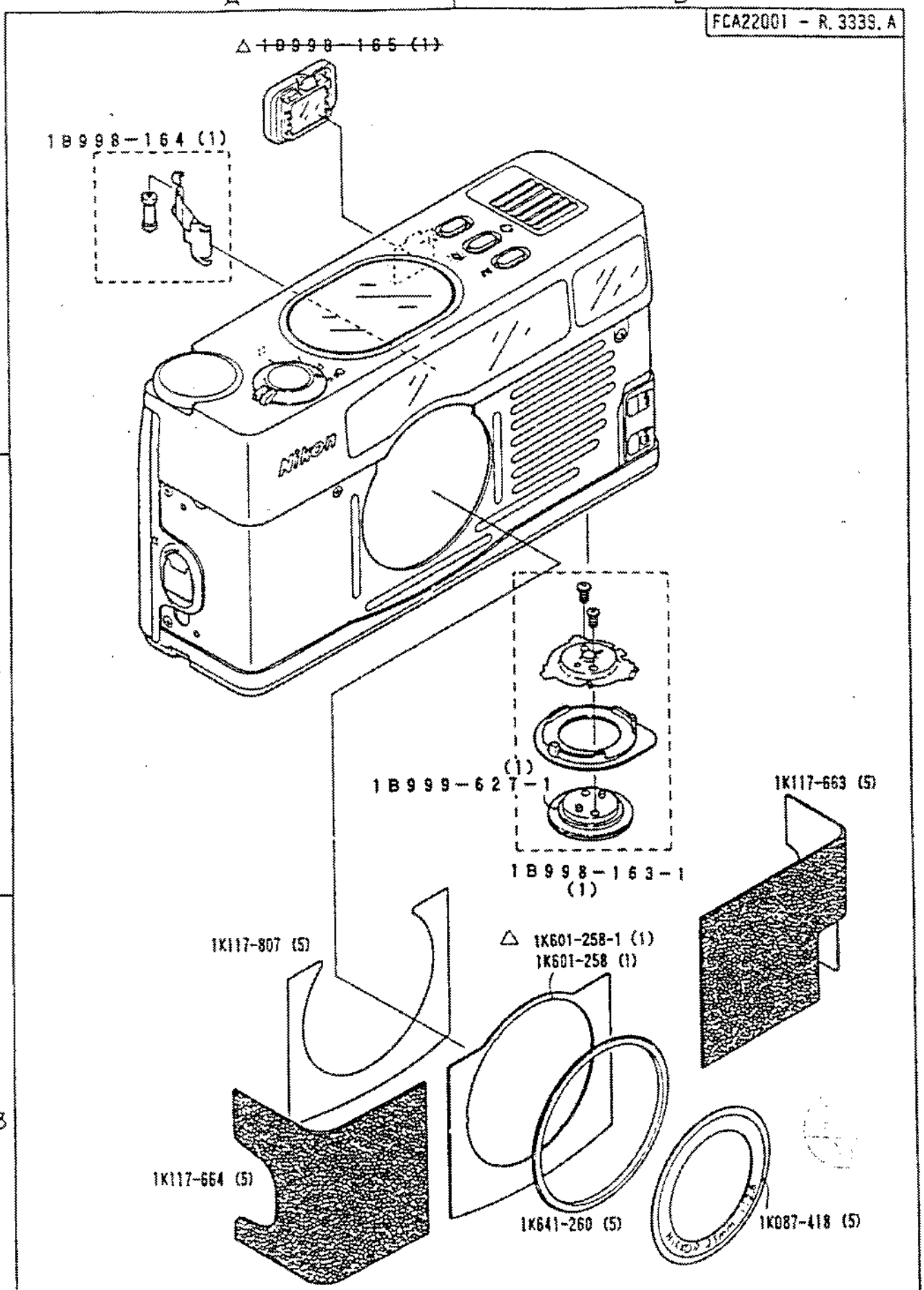
△ ~~1B998-165 (1)~~
1B998-164 (1)
(1)
1B999-627-1
1B998-163-1
(1)
1K117-663 (5)
1K117-807 (5)
△ 1K601-258-1 (1)
1K601-258 (1)
1K117-664 (5)
1K641-260 (5)
1K087-418 (5)

Fig. 9

部品表 Parts List

FCA22001-R. 3339. B

| | 部品番号 Part No. | 補助番号 Ckt No. | 名称 Name | 1台分個数 Q'ty Per Unit | 部組品番号 Assembly | 参照図番 Fig. No. | 販売区分 Class. of Salability | 備考 Remarks | 要求単位 Order Unit Q'ty |
|---|---|---|---|---|---|---|---|---|---|
| △ | 1G118-011 | G14 | 接眼レンズ Eyepiece lens | 1 | 1B999-623 | 5 A1 | ○△ | RP-9565 RP-9514. RP-9557 | 1 |
| | 1G780-015 | G10 | FD窓 FD Window | 1 | | 8 B2 | ○ | | 5 |
| △ | ~~*13-1頁の部品番号1G118-011はこの頁に移しましたので13-1頁は抜いて下さい。~~ ~~*Parts No 1G118-011 is moved to this page No from page No 13-1. Please remove the page No 13-1.~~ | | | | | | | RP-9565 RP-9557 | |

Change page (差し替え) △×2

AUG. 5. 1995



パーツセンター M

| | 部品番号 Part No. | 補助番号 Ckt No. | 名称 Name | 1台分個数 Q'ty Per Unit | 部組品番号 Assembly | 参照図番 Fig. No. | 販売区分 Class. of Salability | 備考 Remarks | 要求単位 Order Unit Q'ty |
|---|---|---|---|---|---|---|---|---|---|
| | 1K001-089 | 840 | Screw | 2 | | 7.8 | ○ | | 10 |
| | 1K001-094 | 886 | Screw | 4 | | 8<br>B3 | ○ | | 10 |
| | * 1K010-108 | 801 | Screw | 4 | | 2<br>B3 | ○ | FEA50001<br>FCA13001 | 10 |
| | * 1K010-110 | 816 | Screw | 4 | | 2.5<br>6 | ○ | FCA13001<br>FCA09002 | 10 |
| | 1K010-111-1 | 814 | Screw | 16 | | 1.3<br>4.5<br>8 | ○ | | 10 |
| | * 1K010-112 | 813 | Screw | 6 | | 4.6<br>7 | ○ | FCA18001<br>FCA13001 | 10 |
| | * 1K010-114 | 812 | Screw | 11 | | 3.4<br>5.8 | ○ | FCA18001<br>FCA13001 | 10 |
| △ | 1K010-117 | 809 | Screw | 1 | | 6<br>B1 | ○ | RP-9565 RP-9413 | 10 |
| | * 1K010-151 | 815 | Screw | 3 | | 7<br>A2 | ○ | FCA09002 | 10 |
| | 1K010-243 | 804 | Screw | 6 | | 6.7 | ○ | | 10 |
| | 1K010-245 | 811 | Screw | 4 | | 1.6 | ○ | | 10 |
| | 1K010-246 | 841 | Shoulder screw | 1 | | 3<br>B3 | ○ | | 10 |
| | 1K010-247 | 842 | Shoulder screw | 1 | | 3<br>B3 | ○ | | 10 |
| | 1K010-248 | 843 | Shoulder screw | 1 | | 3<br>B3 | ○ | | 10 |
| | 1K010-249 | 844 | Shoulder screw | 1 | | 3<br>A3 | ○ | | 10 |
| OLD △ | 1K010-250 | 845 | Shoulder screw | 1 | | 6<br>A3 | ○ | RP-9565 RP-9557 | 10 |
| NEW | 1K010-272 | 848 | | | | | | | |
| | 1K010-251 | 847 | Shoulder screw | 1 | | 6<br>A2 | ○ | | 10 |
| △ | ~~* 3頁の1K010-272は本頁に移しました。~~<br>~~* Parts No 1K010-272 is moved to this page No from page No 3.~~ | | | | | | | RP-9565 RP-9557 | |

Change page ( 差し替え) △×3



AUG. 5. 1995

パーツセンター M

部品表 Parts List

FCA22001-R. 3339. B

| 部品番号 Part No. | 補助番号 Ckt No. | 名称 Name | 1台分個数 Q'ty Per Unit | 部組品番号 Assembly | 参照図番 Fig. No. | 販売区分 Class. of Salability | 備考 Remarks | 要求単位 Order Unit Q'ty |
|---|---|---|---|---|---|---|---|---|
| 1K010-265 | 817 | Screw | 3 | | 4 D3 | ○ | | 10 |
| 1K010-267 | 807 | Screw | 1 | | 8 A3 | ○ | | 10 |
| △ * 1K050-037 | — | ワッシャー (t=0.2) Adjust washer | 2 | | 2 B3 | ○ | RP-9565 RP-9413 94F-2002 | 10 |
| 1K050-414 | 612A | B・f調整環 (t=0.05) Adjust ring. BF | 1 | | 4 B3 | ○ | | 5 |
| 1K050-415 | 612B | B・f調整環 (t=0.06) Adjust ring. BF | 1 | | 4 B3 | ○ | | 5 |
| 1K050-416 | 612C | B・f調整環 (t=0.07) Adjust ring. BF | 1 | | 4 B3 | ○ | | 5 |
| 1K050-417 | 612D | B・f調整環 (t=0.08) Adjust ring. BF | 1 | | 4 B3 | ○ | | 5 |
| 1K050-418 | 612E | B・f調整環 (t=0.09) Adjust ring. BF | 1 | | 4 B3 | ○ | | 5 |
| 1K050-419 | 612F | B・f調整環 (t=0.10) Adjust ring. BF | 1 | | 4 B3 | ○ | | 5 |
| 1K083-237 | 196 | 電池シール Battery seal | 1 | | 1 B2 | ○ | | 5 |
| 1K087-418 | 616 | 銘板 Name plate | 1 | | 9 B3 | ○ | | 5 |
| * ~~1K116-394~~ 1K117-860 | 194 | 上カバーモルト Sponge. Upper cover | 1 | | 8 B3 | ○ | RP-9454 製技94F-2015参照 | 5 |
| * 1K116-470 | 195 | フイルムガイドシール Seal. Film guide | 1 | | 1 B1 | ○ | FCA09002 FCA13001 | 5 |
| * 1K116-970 | 527 | 接眼モルト Sponge. Eyepiece | 1 | 1B999-623 | 5 A1 | ○△ | FRW52801 | 5 |
| 1K117-663 | 110 | 革(右側) Leatherette. SB side | 1 | | 9 B2 | ○ | | 5 |
| 1K117-664 | 111 | 革(左側) Leatherette. Release button side | 1 | | 9 A3 | ○ | | 5 |
| | | | | | | | | |
| △ * ~~本頁の1K010-272は2頁に移しました。~~ * Parts No 1K010-272 is moved to 2 page. | | | | | | | RP-9565 RP-9557 | |

Change page (差し替え) △×2

AUG. 5. 1995



パーツセンター M

部品表 Parts List

FCA22001-R. 3339. B

| | 部品番号 Part No. | 補助番号 Ckt No. | 名称 Name | 1台分個数 Q'ty Per Unit | 部組品番号 Assembly | 参照図番 Fig. No. | 販売区分 Class. of Salability | 備考 Remarks | 要求単位 Order Unit Q'ty |
|---|---|---|---|---|---|---|---|---|---|
| | 1K117-665 | 121 | 裏蓋革<br>Leatherette , Camera back | 1 | | 7<br>A1 | ○ | | 5 |
| △ | 1K117-666 | 127 | パトローネモルト<br>Sponge . Patorone | 1 | | 7<br>B1 | ○ | RP-9565 RP-9413 | 5 |
| | 1K117-670 | 650 | ゴムブッシュ<br>Rubber bush | 2 | | 3<br>A3 | ○ | | 5 |
| | 1K117-671 | 702 | 圧接ゴム<br>Rubber , Press contact | 5 | | 6.7 | ○ | | 5 |
| | 1K117-672 | 751 | 両面テープ . DX<br>Double sided adhesive tape . DX | 1 | | 4<br>B2 | ○ | | 5 |
| | 1K117-674 | 754 | 両面テープ 1 4×7<br>Double sided adhesive tape 1 | 6 | | 4<br>A1 | × | RP-9454<br>TA-0003 | 1 roll |
| | 1K117-675 | 755 | 両面テープ 2 5×10<br>Double sided adhesive tape 2 | 4 | | 4<br>A1 | × | RP-9454<br>TA-0003 | 1 roll |
| | 1K117-677 | 191 | 裏蓋モルト1<br>Sponge 1 , Back door | 2 | | 1<br>A1 | ○ | | 5 |
| | 1K117-678 | 192 | 裏蓋モルト2<br>Sponge 2 , Back door | 1 | | 7<br>D2 | ○ | | 5 |
| | 1K117-700 | 305 | ストロボシート<br>Sheet , SB | 1 | | 8<br>B1 | ○ | | 5 |
| | 1K117-747 | 133 | 裏蓋モルト4<br>Sponge 4 , Back door | 1 | 1B998-160 | 7<br>B1 | ○△ | | 5 |
| | 1K117-750 | 525 | 目隠しモルト<br>Shield sponge , Finder | 1 | 1B999-623 | 5<br>A1 | ○△ | | 5 |
| | 1K117-754 | 172 | DB モルト<br>DB sponge | 1 | | 2<br>B1 | ○ | | 5 |
| | 1K117-755 | 147 | 横カバー目隠しシート<br>Side cover shield sheet | 1 | | 8<br>B2 | ○ | | 5 |
| △ | 1K117-801 | 759 | 圧接絶縁テープ . AE圧接 5×8<br>Insulation tape. Press contact AE | 1 | | 1<br>A1 | × | RP-9565 RP-9413<br>TA-0012 | 1 roll |
| △ | 1K117-802 | 760 | Mリード線固定テープ 5×11<br>Fix tape . Lead wire M | 1 | | 5<br>B2 | × | RP-9565<br>RP-9557 RP-9413<br>TA-0012 | 1 roll |
| | | | | | | | | | |
| | | | | | | | | | |

Change page ( 差し替え) △×3

AUG. 5. 1995



パーツセンター M

部品表 Parts List

FCA22001-R. 3339. B

| | 部品番号 Part No. | 補助番号 Ckt No. | 名称 Name | 1台分個数 Q'ty Per Unit | 部組品番号 Assembly | 参照図番 Fig. No. | 販売区分 Class. of Salability | 備考 Remarks | 要求単位 Order Unit Q'ty |
|---|---|---|---|---|---|---|---|---|---|
| △ | 1K117-803 | 762 | 針モジュールFPC 固定テープ 5×20<br>Fix tape . needle module FPC | 1 | 1B060-554 | 8<br>B3 | × | RP-9565 RP-9413<br>TA-0012 | 1 roll |
| △ | 1K117-804 | 529 | 絶縁テープ.LED-FPC<br>Insulation tape.LED FPC | 1 | | 6<br>B1 | × | RP-9565 RP-9413<br>TA-0009 | 1 roll |
| △ | 1K117-805 | 763 | 電池室目隠しテープ 10×10<br>Shield tape . Battery chamber | 1 | | 6<br>A2 | × | RP-9565 RP-9413<br>TA-0013 | 1 set (20pcs) |
| | 1K117-807 | 764 | 両面テープ(前カバー部) (Front cover)<br>Double sided adhesive tape . | 1 | | 9<br>A3 | ○ | | 5 |
| △ | 1K117-810 | 765 | トリガー飛び防止テープ<br>Tape.Preventing trigger skipping | 1 | | 8<br>B1 | ○ | RP-9565 RP-9413 | 5 |
| △ | 1K117-812 | 138 | ゴミ付着防止テープ, C10 62×1.2 ×t=1.2<br>Tape . Preventing dust adhering | 1 | | 6<br>B1 | ○ | RP-9565 RP-9413 | 5 |
| △ | 1K117-814 | 148 | 漏光防止テープ 8×8<br>Light baffle tape | 1 | | 2<br>A1 | ○ | RP-9565 RP-9413 | 5 |
| △ | 1K117-815 | 183 | 漏光防止テープ . DB<br>Tape . Light proof for DB | 1 | | 5<br>A2 | ○ | RP-9565 RP-9413 | 5 |
| △ | 1K117-816 | 142 | 両面テープ<br>Double sided adhesive tape | 1 | | 7<br>B2 | ○ | RP-9565 RP-9413 | 5 |
| | 1K117-862 | 691 | 遮光モルト 2 5.5X4<br>Light tight sponge 2 | 1 | | 2<br>B3 | ○ | RP-9454 | 5 |
| | 1K117-863 | 692 | 遮光モルト 3 7.5X4<br>Light tight sponge 3 | 1 | | 2<br>B3 | ○ | RP-9454 | 5 |
| | 1K117-911 | 306 | 絶縁シート<br>Insulating sheet | 1 | | 6<br>B1 | ○ | RP-9454 | 5 |
| | 1K120-386 | 870 | Screw | 3 | | 4<br>B3 | ○ | | 10 |
| | 1K120-387 | 876 | Screw | 1 | | 4<br>B3 | ○ | | 10 |
| △ | 1K120-388 | 883 | Screw | 2 | | 2 | ○ | RP-9565 RP-9557 | 10 |
| | 1K120-389 | 887 | Screw | 2 | | 3<br>B3 | ○ | | 10 |
| | 1K123-186 | 884 | Screw | 1 | | 4<br>D1 | ○ | | 10 |
| | | | | | | | | | |

Change page (差し替え) △×9

AUG. 5. 1995



パーツセンター M

部品表 Parts List

FCA22001-R. 3339. B

| | 部品番号 Part No. | 補助番号 Ckt No. | 名称 Name | 1台分個数 Q'ty Per Unit | 部組品番号 Assembly | 参照図番 Fig. No. | 販売区分 Class. of Salability | 備考 Remarks | 要求単位 Order Unit Q'ty |
|---|---|---|---|---|---|---|---|---|---|
| OLD | 1K150-093 | 173 | パノラマレバー軸 Shaft . Panorama lever | 1 | | 2 B1 | ○ | RP-9454 製技94F-1031参照 | 5 |
| NEW | 1K150-093-1 | | | | | | | | |
| | 1K165-225 | 608 | 滑りシート（前部レンズ） Plastik sheet ( front lens unit) | 1 | | 4 D3 | ○ | | 5 |
| | 1K165-226 | 705 | 圧接ゴム Rubber . Press contact | 1 | | 6 A1 | ○ | | 5 |
| | 1K201-108 | 411 | コマンドダイヤル Command dial | 1 | | 8 A1 | ○ | | 5 |
| | 1K206-106 | 181 | パノラマ操作ノブ Knob . Adjust panorama | 1 | | 8 A1 | ○ | | 5 |
| | 1K206-107 | 402 | セレクトダイヤル Select dial | 1 | | 8 A1 | ○ | | 5 |
| | 1K220-381 | 405 | レリーズ釦バネ Spring . Release button | 1 | | 8 A1 | ○ | | 5 |
| | 1K220-382 | 413 | ボールバネ（411 用） Spring . Ball (For 411) | 1 | | 8 A3 | ○ | | 5 |
| | 1K220-383 | 452 | DX バネ Spring . DX | 6 | | 4 A2 | ○ | | 5 |
| | 1K220-390 | 168 | パノラマボールバネ Spring . Panorama ball | 1 | | 2 B1 | ○ | | 5 |
| | 1K225-243 | 151 | 錠バネ Spring . Lock cover key | 1 | | 7 A2 | ○ | | 5 |
| | 1K225-251 | 164 | 引張りバネ Spring . Panorama lever | 1 | | 2 A1 | ○ | RP-9454 製技94F-1031参照 | 5 |
| | 1K230-398 | 643 | 遊星ねじりバネ Spring . Planetary gear | 1 | | 3 B2 | ○ | | 5 |
| | 1K233-086 | 664 | バリヤ付勢バネ Spring . Lens cover | 1 | | 4 D1 | ○ | | 5 |
| | 1K240-909 | 134 | パトローネ押さえ板 Retainer plate . Patorone | 1 | | 1 A2 | ○ | | 5 |
| | 1K240-910 | 190 | P I 押さえ板 Retainer plate . PI | 1 | | 1 A3 | ○ | | 5 |
| | 1K240-911 | 241 | 電池接片（＋側） Battery contact ( + ) | 1 | | 1 B1 | ○ | | 5 |
| △ | 1K240-912 | 242 | 電池接片（－側） Battery contact ( − ) | 2 | | 1 B2 | ○ | RP-9565 RP-9413 | 5 |

Change page （差し替え）△×1

AUG. 5. 1995



パーツセンター M

| 部品番号 Part No. | 補助番号 Ckt No. | 名称 Name | 1台分個数 Q'ty Per Unit | 部組品番号 Assembly | 参照図番 Fig. No. | 販売区分 Class. of Salability | 備考 Remarks | 要求単位 Order Unit Q'ty |
|---|---|---|---|---|---|---|---|---|
| 1K240-915 | 406 | レリーズSW台<br>Switch plate . Release | 1 | | 8<br>A3 | ○ | | 5 |
| 1K240-917 | 684 | FOS SWバネ1<br>Switch-spring 1 . FOS | 1 | | 3<br>A2 | ○ | | 5 |
| 1K240-918 | 685 | FOS SWバネ2<br>Switch-spring 2 . FOS | 1 | | 3<br>A2 | ○ | | 5 |
| △ ~~1K240-919~~<br>1K240-919-2 | 687 | BOS SWバネ1<br>Switch-spring 1 . BOS | 1 | | 3<br>B1 | ○ | RP-8454<br>製技94F-1021参照 | 5 |
| 1K240-920 | 688 | BOS SWバネ2<br>Switch-spring 2 . BOS | 1 | | 3<br>B1 | ○ | | 5 |
| 1K260-660 | 186 | データローラー軸<br>Shaft . Data roller | 1 | | 1<br>A2 | ○ | | 5 |
| 1K260-661 | 187 | Dギヤ<br>D gear | 1 | | 1<br>A2 | ○ | | 5 |
| 1K260-662 | 215 | スプール<br>Spool | 1 | | 1<br>B2 | ○ | | 1 |
| 1K260-668 | 646 | Iギヤ2（羽根車）<br>I gear 2 | 1 | | 3<br>B3 | ○ | | 5 |
| 1K260-671 | 671 | バリヤ開閉レバー<br>Lens cover . O/C-lever | 1 | | 4<br>B1 | ○ | | 5 |
| 1K260-673 | 675 | Bギヤ5<br>B gear 5 | 1 | | 4<br>B1 | ○ | | 5 |
| 1K260-674 | 676 | Bギヤ6<br>B gear 6 | 1 | | 4<br>B1 | ○ | | 5 |
| 1K277-160 | 634 | Lギヤ4－5<br>L gear 4-5 | 1 | | 3<br>B3 | ○ | | 5 |
| 1K277-161 | 636 | Lギヤ7－8<br>L gear 7-8 | 1 | | 3<br>B3 | ○ | | 5 |
| 1K277-163 | 673 | Bギヤ1－2<br>B gear 1-2 | 1 | | 4<br>B1 | ○ | | 5 |
| 1K277-164 | 674 | Bギヤ3－4<br>B gear 3-4 | 1 | | 4<br>B1 | ○ | | 5 |
| 1K360-061 | 146 | 蝶番軸<br>Shaft . Hinge | 1 | | 7<br>D1 | ○ | | 5 |
| | | | | | | | | |

Change page （差し替え）△×1



パーツセンター M

OCT. 11. 1994

| | 部品番号 Part No. | 補助番号 Ckt No. | 名称 Name | 1台分個数 Q'ty Per Unit | 部組品番号 Assembly | 参照図番 Fig. No. | 販売区分 Class. of Salability | 備考 Remarks | 要求単位 Order Unit Q'ty |
|---|---|---|---|---|---|---|---|---|---|
| | 1K360-063 | 197 | ストラップ軸 Shaft . Strap | 1 | | 7 C3 | ○ | | 5 |
| | 1K371-793 | 180 | 圧入ピン Pin . Slide plate | 2 | | 2 A1 | ○ | | 5 |
| | 1K371-798 | 401 | レリーズ釦 Release button | 1 | | 8 A1 | ○ | | 5 |
| | 1K437-206 | 619 | 直進キー2 Linear key 2 | 1 | | 4 A1 | ○ | | 1 |
| OLD | 1K601-258 | 101 | 前カバー Front cover | 1 | | 9 B3 | ○ | RP-9454 外観色変更 Change visual color | 1 |
| NEW | 1K601-258-1 | | | | | | | | |
| | 1K601-262 | 176 | パノラマレバー Lever . Panorama | 1 | | 2 B1 | ○ | | 5 |
| | 1K601-263 | 188 | D押さえ板 Retainer plate . D | 1 | | 1 A2 | ○ | | 5 |
| | 1K601-265 | 408 | クリック板 (S) Click plate (S) | 1 | | 8 A2 | ○ | | 5 |
| | 1K601-266 | 414 | クリック板 (C) Click plate (C) | 1 | | 8 A2 | ○ | | 5 |
| | 1K601-267 | 418 | コマンドダイヤル板 Command dial plate | 1 | | 8 A1 | ○ | | 5 |
| | 1K601-268 | 522 | 採光窓 Lighting window | 1 | | 8 B1 | ○ | | 5 |
| | 1K601-270 | 686 | FOS絶縁板 Insulation plate . FOS | 1 | | 3 A2 | ○ | | 5 |
| | 1K601-271 | 689 | BOS絶縁板 Insulation plate . BOS | 1 | | 3 B1 | ○ | | 5 |
| | 1K601-272 | 721 | 絶縁シート Insulation sheet | 1 | | 6 B3 | ○ | | 5 |
| | 1K601-294 | 704 | 圧接板C (針) Press contact plate C | 1 | | 7 C2 | ○ | | 5 |
| △ | ~~1K601-310~~ | 202 | ギアー押さえ板 Plate . Holding down gear | 1 | | 6 A3 | ○ | RP-9565 RP-9557 RP-9413 | 5 |
| | 1K611-889 | 107 | 前カバー当て板 Front cover plate | 1 | | 7 D3 | ○ | | 1 |
| | | | | | | | | | |

Change page (差し替え) △×1

AUG. 5. 1995



パーツセンター M

部品表 Parts List

FCA22001-R. 3339. B

| | 部品番号 Part No. | 補助番号 Ckt No. | 名称 Name | 1台分個数 Q'ty Per Unit | 部組品番号 Assembly | 参照図番 Fig. No. | 販売区分 Class. of Salability | 備考 Remarks | 要求単位 Order Unit Q'ty |
|---|---|---|---|---|---|---|---|---|---|
| | 1K611-894 | 136 | 裏蓋蝶番<br>Hinge . Camera back | 1 | | 7<br>D2 | ○ | | 1 |
| OLD | 1K611-897 | 145 | 横カバー<br>Side cover | 1 | | 7<br>D2 | ○ | RP-9454<br>外観色変更<br>Change visual color | 1 |
| NEW | 1K611-897-2 | | | | | | | | |
| | 1K611-902 | 182 | ノブ押さえ板<br>Retainer knob plate | 1 | | 8<br>B2 | ○ | | 5 |
| | 1K611-903 | 426 | ファンクションSW裏打ち板<br>Line plate . Function switch | 1 | | 8<br>B3 | ○ | | 5 |
| | 1K611-911 | 620 | FPC押さえ<br>Retainer . FPC | 1 | | 4<br>A1 | ○ | | 5 |
| | 1K611-912 | 621 | FPC ガイド板<br>Guide plate . FPC | 1 | | 4<br>A1 | ○ | | 5 |
| | 1K611-913 | 622 | FPC押さえ<br>Retainer . FPC | 1 | | 4<br>B3 | ○ | | 5 |
| | 1K611-915 | 652 | ギヤヘリ押さえ<br>Retainer gear edge | 1 | | 4<br>C1 | ○ | | 5 |
| | 1K611-916 | 701 | 圧接板A (B2001)<br>Press contact plate A | 3 | | 6<br>A1 | ○ | | 5 |
| | 1K611-917 | 703 | 圧接板B (LCD)<br>Press contact plate B | 1 | | 6<br>A2 | ○ | | 5 |
| | 1K611-918 | 711 | DX FPC押さえ (#1005)<br>Retainer FPC . DX | 1 | | 5<br>B3 | ○ | | 5 |
| | 1K611-974-1 | 163 | バネ掛け板<br>Plate , Spring hook | 1 | | 2<br>A1 | ○ | RP-9454<br>製技94F-1031参照 | 5 |
| △ | 1K611-975-2 | 174 | パノラマ板バネ<br>Plate spring , Panorama | 1 | | 2<br>B2 | ○ | RP-9565 RP-9557<br>RP-9454<br>製技94F-1031参照 | 5 |
| | 1K620-171 | 451 | DX 接片<br>DX Contact | 6 | | 4<br>A2 | ○ | | 5 |
| | 1K625-135 | 126 | パトローネ窓<br>Window . Patorone | 1 | 1B998-160 | 7<br>B2 | ○△ | | 5 |
| | 1K641-260 | 109 | 飾りリング<br>Decoration ring | 1 | | 9<br>B3 | ○ | | 5 |
| | 1K641-261 | 185 | デートローラー<br>Roller . Date | 1 | | 1<br>A1 | ○ | | 5 |
| | | | | | | | | | |

Change page (差し替え) △×1

AUG. 5. 1995



パーツセンター M

部品表 Parts List

FCA22001-R. 3339. B

| | 部品番号 Part No. | 補助番号 Ckt No. | 名称 Name | 1台分個数 Q'ty Per Unit | 部組品番号 Assembly | 参照図番 Fig. No. | 販売区分 Class. of Salability | 備考 Remarks | 要求単位 Order Unit Q'ty |
|---|---|---|---|---|---|---|---|---|---|
| | 1K641-262 | 615 | 前環<br>Front ring | 1 | | 4<br>D3 | ○ | | 5 |
| | 1K681-407 | | 巻戻しフォーク<br>Rewind fork | 1 | | 1<br>A3 | ○△ | RP-9522<br>サ技No. 95-05 | 5 |
| | 1K681-629 | 106 | 三脚ねじ<br>Tripod screw | 1 | | 5<br>A3 | ○ | | 5 |
| | 1K681-636 | 301 | プロテクター<br>Diffusor | 1 | | 8<br>B1 | ○ | | 5 |
| | 1K681-637 | 403 | 取付けブロック<br>Installation block | 1 | | 8<br>A2 | ○ | | 5 |
| | 1K681-638 | 421 | ファンクション釦<br>Function button | 3 | | 8<br>B2 | ○ | | 5 |
| | 1K681-639 | 435 | SB釦<br>SB-button | 2 | | 6<br>B3 | ○ | | 5 |
| | 1K681-640 | 438 | SB釦ブロック<br>Block , SB-button | 1 | | 6<br>B3 | ○ | | 5 |
| | 1K681-642 | 445 | DB釦<br>Button . DB | 2 | | 7<br>C2 | ○ | | 5 |
| | 1K681-643 | 448 | 保持モールド<br>Mold | 1 | | 7<br>C2 | ○ | | 5 |
| | 1K681-644 | 455 | DX 押さえ<br>Retainer plate . DX | 1 | | 4<br>A2 | ○ | | 5 |
| | 1K681-652 | 613 | 後飾り<br>Rear decoration | 1 | | 4<br>B3 | ○ | | 1 |
| | 1K681-653 | 631 | ギヤ台<br>Plate . Gear | 1 | | 3<br>A3 | ○ | | 1 |
| | 1K681-654 | 641 | 系止レバー<br>Stopper lever | 1 | | 3<br>B2 | ○ | | 5 |
| △ | 1K681-728 | 116 | パトローネ規制モールド<br>Mold . Controling patorone | 1 | 1B998-160 | 7<br>B2 | ○△ | RP-9565<br>RP-9557 RP-9413 | 5 |
| OLD<br>NEW | 1K999-127<br>1K999-127-1 | 104 | 底カバー<br>Bottom cover | 1 | | 7<br>A3 | ○ | No. 5001001～<br>RP-9454 外観色変更<br>Change visual color | 1 |
| △ | 1K999-148 | | シャッターパクツキ防止テープ<br>Tape . Shutter | 1 | 1B999-754 | 4<br>D3 | ○ | RP-9565 RP-9454<br>RP-9485 RP-9413<br>廃止部品の復活 | 10 |
| △ | 1K999-149 | | シャッターパクツキ防止テープ<br>Tape . Shutter | 1 | 1B999-754 | 4<br>D3 | ○△ | RP-9565<br>RP-9485 RP-9413<br>製技94F-1034参照 | 10 |

Change page (差し替え) △×3

AUG. 5. 1995



パーツセンター M

部品表 Parts List

FCA22001-R. 3339. B

| | 部品番号 Part No. | 補助番号 Ckt No. | 名称 Name | 1台分個数 Q'ty Per Unit | 部組品番号 Assembly | 参照図番 Fig. No | 販売区分 Class. of Salability | 備考 Remarks | 要求単位 Order Unit Q'ty |
|---|---|---|---|---|---|---|---|---|---|
| △ | 1K999-191 | | バリアストッパーゴム<br>Stopper rubber | 1 | | 4<br>C1 | ○ | RP-9604 | 5 |
| △ | 1K999-192 | | バリアストッパー止めビス<br>Stopper screw | 1 | | 4<br>C1 | ○ | RP-9604 | 5 |
| | 1S190-028 | 1021 | メイン CPU<br>Main CPU | 1 | 1S020-105 | 6<br>A3 | ○△ | | 5 |
| | 1S190-029 | 1022 | 表示 CPU<br>Pilot CPU. | 1 | 1S020-105 | 6<br>A3 | ○△ | | 5 |
| | 1S223-007 | 1023 | MD IC<br>MD IC | 1 | 1S020-105 | 6<br>A3 | ○△ | | 5 |
| | 1S424-036 | 1015 | PTS SW<br>Switch . PTS | 1 | 1S020-105 | 6<br>A3 | ○△ | | 5 |
| | 1S700-365 | 410 | 信号板(S)<br>Signal plate (S) | 1 | | 8<br>A3 | ○ | | 5 |
| | 1S700-366 | 415 | 信号板(C)<br>Signal plate (C) | 1 | | 8<br>A2 | ○ | | 5 |
| | 1S705-271 | 1005 | DX FPC<br>DX FPC | 1 | | 4<br>B2 | ○ | | 5 |
| | 1S758-043 | 425 | ファンクションラバーSW<br>Rubber switch . Function | 1 | | 8<br>B3 | ○ | | 5 |
| | 1S758-044 | 439 | SB ラバーSW<br>Rubber switch . SB | 1 | | 4<br>B3 | ○ | | 5 |
| | 1S758-045 | 449 | DB ラバーSW<br>Rubber Switch . DB | 1 | | 7<br>C2 | ○ | | 5 |
| | 1S768-001 | 715 | M. U SW<br>Switch . M.U | 1 | | 7<br>B3 | ○ | | 5 |
| | QF09C124XX | | 抵抗内蔵トランジスター(DTC124XX)<br>Resistor in Transistor | 1 | | 6<br>B3 | ○ | RP-9485<br>サ情94-16<br>改造用部品 | 1 |
| | | | | | | | | | |
| | | | | | | | | | |
| | | | | | | | | | |
| | | | | | | | | | |

Change page ( 差し替え) △×2

FEB. 01. 1996



パーツセンター M

部品表 Parts List

FCA22001-R. 3339. B

| | 部品番号 Part No. | 補助番号 Ckt No. | 名称 Name | 1台分個数 Q'ty Per Unit | 部組品番号 Assembly | 参照図番 Fig. No. | 販売区分 Class. of Salability | 備考 Remarks | 要求単位 Order Unit Q'ty |
|---|---|---|---|---|---|---|---|---|---|
| △ | A1-17025FA | — | Screw | — | | 8 B3 | ○ | RP-9565 RP-9413 94F-2008 | 10 |
| | G1-14025FD | 832 | Screw | 2 | | 8 A3 | ○ | | 10 |
| | G1-14030FD | 831 | Screw | 1 | | 1 A2 | ○ | | 10 |
| | G1-17035FA | 822 | Screw | 1 | | 7 C1 | ○ | | 10 |
| | G1-17045FA | 821 | Screw | 2 | | 7 D3 | ○ | | 10 |
| △ | G1-20025FD | — | Screw | — | | 7 A2 | ○ | RP-9565 RP-9413 94F-2004 | 10 |
| △ | G1-20030FD | — | Screw | — | | 6 A2 A3 | ○ | RP-9565 RP-9413 94F-2004 | 10 |
| | G2-14030FS | 839 | Screw | 1 | | 2 A1 | ○ | | 10 |
| | G2-17030FD | 837 | Screw | 2 | | 7 C3 | ○ | | 10 |
| | G2-17035FA | 836 | Screw | 4 | | 7 B3 | ○ | | 10 |
| | G2-17040FA | 835 | Screw | 2 | | 7 D1 | ○ | | 10 |
| | G2-17050FD | 834 | Screw | 1 | | 7 C1 | ○ | | 10 |
| | R1-02000FY | 855 | LCD止め座金 Washer . Install LCD | 1 | | 6 B1 | ○ | | 10 |
| | S1-01200SX | 857 | Eリング (401) E ring | 1 | | 8 A1 | ○ | | 10 |
| | T1-01500SX1 (T1-01500SX) | 858 | ボール Ball | 2 | | 2 B1 | ○ | | 10 |
| | | | | | | | | | |
| | | | | | | | | | |
| | | | | | | | | | |

Change page (差し替え) △×3

AUG. 5. 1995



パーツセンター M

部品表 Parts List

FCA22001-R. 3339. B

| | 部品番号 Part No. | 補助番号 Ckt No. | 名称 Name | 1台分個数 Q'ty Per Unit | 部組品番号 Assembly | 参照図番 Fig. No. | 販売区分 Class. of Salability | 備考 Remarks | 要求単位 Order Unit Q'ty |
|---|---|---|---|---|---|---|---|---|---|
| △ | 1G118-011 | G14 | 接眼レンズ Eyepiece lense | 1 | 1B999-623 | 5 A1 | ○△ | RP-9514 | 1 |
| | | | | | | | | | |
| | | | | | | | | | |
| | | | | | | | | | |
| | | | | | | | | | |
| | | | | | | | | | |
| | | | | | | | | | |
| | | | | | | | | | |
| | | | | | | | | | |
| | | | | | | | | | |
| | | | | | | | | | |
| | | | | | | | | | |
| | | | | | | | | | |
| | | | | | | | | | |
| | | | | | | | | | |
| | | | | | | | | | |
| | | | | | | | | | |
| | | | | | | | | | |

Added page (追加) △×1

FEB. 3. 1995



パーツセンター 11

部組品表 Assembly List

FCA22001-R. 3339. B

| | 部組番号 Part No. | 補助番号 Ckt No. | 名称 Name | 1台分個数 Q'ty Per Unit | 大部組品番号 Main assembly No. | 参照図番 Fig. No. | 備考 Remarks | 要求単位 Order Unit Q'ty |
|---|---|---|---|---|---|---|---|---|
| | 1B002-078 | B105 | SW 部組<br>Switch unit | 1 | | 6<br>B3 | | 1 |
| | 1B002-079 | B130 | 裏蓋 SW部組<br>Back door Switch unit | 1 | | 6<br>B2 | | 1 |
| OLD △ NEW | 1B002-087<br>1B002-087-2 | B102 | 上カバー1 部組<br>Upper cover unit 1 | 1 | | 8<br>B1 | RP-9454<br>外観色変更<br>Change visual color | 1 |
| △ | 1B060-552<br>1B999-754 | B604 | シャッター部組<br>Shutter unit | 1 | | 4<br>D3 | RP-9454<br>製技94F-1034参照 | 1 |
| | 1B060-554 | B428 | 針モジュール部組<br>Needle module unit | 1 | | 8<br>B3 | | 1 |
| | 1B240-107 | B404 | ブラシS部組<br>Brush S unit | 1 | | 8<br>A3 | | 1 |
| | 1B240-108 | B416 | ブラシC部組<br>Brush C unit | 1 | | 8<br>A3 | | 1 |
| | 1B260-104 | B672 | バリア開閉ギヤ部組<br>Lens cover , O/C-gear unit | 1 | | 4<br>B1 | | 1 |
| | 1B535-172 | B602 | ヘリコイド部組<br>Helicoid unit | 1 | | 4<br>C3 | | 1 |
| | 1B570-108 | B663 | バリア部組<br>Lens cover unit | 1 | | 4<br>D2 | | 1 |
| | 1B610-128 | B149 | 裏蓋カギ部組<br>Lock key unit , Back door | 1 | | 7<br>A2 | | 1 |
| | *1B998-084 | B234 | 巻き戻しフォーク部組<br>Rewind fork unit | 1 | | 1<br>A3 | FCA13001 | 1 |
| | 1B998-143 | B1032 | PI 1部組<br>PI unit 1 | 1 | | 1<br>A2 | | 1 |
| | 1B998-144 | B2201 | 巻上げギヤユニット2部組<br>Winding gear unit 2 | 1 | | 1<br>B2 | | 1 |
| | 1B998-145 | B204 | 巻き戻し基板部組<br>Rewind base plate unit | 1 | | 1<br>A3 | | 1 |
| | 1B998-146 | B156 | パノラマ部組<br>Panorama unit | 1 | | 2<br>B2 | | 1 |
| | | | | | | | | |
| | | | | | | | | |

Change page ( 差し替え) △×2



OCT. 11. 1994

パーツセンター M

| | 部組番号 Part No. | 補助番号 Ckt No. | 名称 Name | 1台分個数 Q'ty Per Unit | 大部組品番号 Main assembly No. | 参照図番 Fig. No. | 備考 Remarks | 要求単位 Order Unit Q'ty |
|---|---|---|---|---|---|---|---|---|
| | 1B998-147 | B175 | デート遮光板部組<br>Light baffle plate unit | 1 | | 2<br>A2 | | 1 |
| OLD | 1B998-148 | B179 | スライド板部組<br>Slide plate unit | 1 | | 2<br>A1 | RP-9454<br>製技94F-1031参照 | 1 |
| NEW | 1B998-148-1 | | | | | | | |
| | 1B998-149 | B162 | P SW基板部組<br>P switch base plate unit | 1 | | 2<br>B2 | | 1 |
| | 1B998-150-1<br>(1B998-150) | B2004 | LED FPC<br>FPC , LED | 1 | | 6<br>B1 | RP-9565 RP-9413 | 1 |
| | 1B998-151 | B511 | LCD<br>LCD | 1 | | 6<br>B1 | | 1 |
| | 1B998-153 | B150 | 開閉ノブ部組<br>Lock knob unit , Camera back | 1 | | 7<br>A3 | | 1 |
| | 1B998-157 | B1006 | ダイヤルFPC部組<br>Dial FPC unit | 1 | | 8<br>A3 | | 1 |
| OLD | 1B998-160 | B115 | 裏蓋1部組<br>Camera back unit 1 | 1 | | 7<br>B1 | RP-9454<br>外観色変更<br>Change visual color | 1 |
| NEW | 1B998-160-2 | | | | | | | |
| | 1B998-161 | B117 | 圧板部組<br>Pressure plate unit | 1 | | 7<br>B2 | | 1 |
| | 1B998-163-1<br>(1B998-163) | B113 | 電池蓋部組<br>Battery chamber lid unit | 1 | | 9<br>B2 | RP-9565 RP-9406 | 1 |
| | 1B998-164 | B246 | 本体ローラー部組<br>Main frame roller unit | 1 | | 9<br>A1 | | 1 |
| △ | ~~1B998-165~~ | B518 | 接眼枠部組<br>Eyepiece frame unit | 1 | | 9<br>A1 | RP-0018 | 1 |
| | 1B998-166 | B640 | 遊星ギア部組<br>Planetary gear unit | 1 | | 3<br>B3 | | 1 |
| | 1B998-167 | B649 | ギア部組<br>Gear unit | 1 | | 3<br>B3 | | 1 |
| | | | | | | | | |
| | | | | | | | | |
| | | | | | | | | |
| | | | | | | | | |

部組品表 Assembly List

FCA22001-R. 3339. B

| | 部組番号 Part No. | 補助番号 Ckt No. | 名称 Name | 1台分個数 Q'ty Per Unit | 大部組品番号 Main assembly No. | 参照図番 Fig. No. | 備考 Remarks | 要求単位 Order Unit Q'ty |
|---|---|---|---|---|---|---|---|---|
| | 1B998-168 | B1011 | Lモーター部組<br>L Motor unit | 1 | | 3<br>A3 | | 1 |
| | 1B998-169 | B2032 | PI 2部組<br>PI unit 2 | 1 | | 3<br>A3 | | 1 |
| | 1B998-171 | B1013 | 赤目ランプ<br>Lamp . Prevent Red eye | 1 | 1B998-173 | 3<br>A1 | | 1 |
| OLD △ NEW | 1B998-173<br>1B998-173-1 | B2531 | AFブロック2部組<br>AF Block unit 2 | 1 | | 3<br>A1 | RP-9565 RP-9482<br>RP-9454<br>サ技94-23 参照 | 1 |
| | 1B998-174 | B605 | 前群部組<br>Front lens unit | 1 | | 4<br>B3 | | 1 |
| | 1B998-178 | B610 | 後群部組<br>Rear lens unit | 1 | | 4<br>B3 | | 1 |
| | 1B998-185 | B440 | PTS ノブ<br>Knob unit . PTS | 1 | | 6<br>B2 | | 1 |
| | 1B999-623 | | ファインダー部組<br>Finder unit | 1 | | 5<br>A1 | | 1 |
| | 1B999-624 | | 暗箱部組<br>Dark box unit | 1 | | 3<br>B2 | | 1 |
| △ | 1B999-627-1<br>(1B999-627) | | コインスロット部組<br>Coin slot unit | 1 | 1B998-163-1 | 9<br>B2 | RP-9565 RP-9406 | 1 |
| | | | | | | | | |
| | | | | | | | | |
| | | | | | | | | |
| | | | | | | | | |
| | | | | | | | | |
| | | | | | | | | |
| | | | | | | | | |
| | | | | | | | | |

Change page ( 差し替え) △×2

AUG. 5. 1995



パーツセンター M

部品表 Parts List

FCA22101-R. 3339. B

| | 部品番号 Part No. | 補助番号 Ckt No. | 名称 Name | 1台分個数 Q'ty Per Unit | 部組品番号 Assembly | 参照図番 Fig. No. | 販売区分 Class. of Salability | 備考 Remarks | 要求単位 Order Unit Q'ty |
|---|---|---|---|---|---|---|---|---|---|
| OLD | 1K999-128 | 104 | 底カバー | 1 | | 7 | ○ | NO. USA 4001001～ RP-9454 外観色変更 | 1 |
| △ NEW | 1K999-128-1 | | Bottom cover | | | A3 | | Change visual color | |

Change page (差し替え) △×1



OCT. 11. 1994

パーツセンター M